FARMI FOREST

AWARD WINNING FORESTY TRAILERS

FT9, FT11, FT13, FT17

FARMI FOREST

Farmi Forest trailers and cranes

World's first and the best trailer. You will try once and never change it again. The End Game.

Farmi Forest trailers are the award winning, professional to multipurpose usage and most of all the end game trailer for many forest and farm operators. Farmi Forest's log trailers are durable, agile and stable, also on difficult terrains.

FARMI log trailers are known for their outstanding usability, functionality and durability. The trailers have been calibrated so that their own weight is proportional to the size of the load compartment. This ensures making smooth progress, also when the trailer is loaded.

We in Farmi Forest name our trailers based on the load it can carry, not the total weight of the unit. It is just the attitude we in Farmi provide. 9 Ton trailer carries 9 tons of material. Period.

FT9 - 9 ton load capacity

FT11 – 11 ton loading capacity

FT13 – 13 ton loading capacity

FT15 – 15 ton loading capacity

Why FARMI is the award winning trailer?

1. Low centre point of gravity creates balance

The only way to design a professional trailer is to have a low center point of gravity. The purpose is to ensure that the trailer's operation is balanced, also when it is empty, on the road, with full load or in difficult terrain. Years of optimizing, designing and calibrating the load compartment as well as bringing the crane's anchor point as low as possible and close to the trailer frame gains importance, when the log trailer is equipped with a crane.

2. Single beam (The one and only)

In a single beam log trailer, the position of the bogie frame and removable banks can be adjusted depending on the length of the timber being transported and the required shaft weight. The manufacture of Farmi trailers has involved investments in quality. The parts we use are dimensionally accurate and carefully manufactured. This is visible to users as steady operation and torsional rigidity when crossing obstacles. Only choose single beam trailers for your operations. All of our trailers are equipped with a 2-cylinder articulated drawbar steering system with plenty of turning force. The steering system has been designed for safe and controlled operation.

3. Right accessories for all professional operations

A wide range of accessories is available for our log trailers. We can be equip your trailer with a roller drive, hub drive or axle drive. The log trailers' pump units also ensure sufficient yield and oil flow for both trailer drive and crane operation. The oils of the tractor and the timber combination will not get mixed, preventing impurities from circulating easily. Do it your way!

Model markings

Product:
CR = CRANE
FT = FOREST TRAILER

CR 6 9

FT 13

Gross lifting capacity, ton meters

Max outreach, meters

Load capacity, tons

Overall picture

FARMI FOREST

	FT9	FT11	FT13	FT17
Extra bolster set	X	X	X	X
Extended frame and extra bolster set	X	X	X	X
4WD roller-drive	-	X	X	-
2WD hub-drive (Black Bruin)	-	X	X	-
Wheel Options and reinforcement	X	X	X	-
Road Traffic Kit	X	X	X	
Hydraulic brakes, 2 wheels IN	X	-	-	-
Hydraulic brakes, 2 wheels OUT	X	X	X	-
Pneumatic brakes, 2 wheels	X	X	X	-
Overrun front brakes	X	-	-	-
Overrun front and hydraulic rear brakes	X	-	-	-
Hydraulic brakes, 4 wheels OUT	-	X	X	X
Pneumatic brakes, 4 wheels	-	X	X	-
HD unit, fixed displacement or load sensing,male	X	X	X	X
HD unit fixed displacement or load sensing,female	X	X	X	-
Operator's Stand	X	X	-	-
Rack, for chainsaw, axe and combitank	X	X	X	X
Road Traffic Kit	X	X	X	X

Check in Farmi Shop which combinations are possible.
https://shop.farmiforest.fi/shop/category/products-trailers-3

FT9 Trailer – AWARD WINNER!

FARMI FOREST

FT9 is our smallest log trailer model for the transport of tree thinnings and firewood. The log trailer is based on Farmi Forest's winner of testing carried out in the Koneviesti professional publication 2014/16.

The carrying capacity of the agile and durable single-beam trailer is 9 tonnes. The trailer's standard equipment includes 6 frame beams (3 pairs) and is only 212 cm wide with 400/60-15.5 tyres.

The FT9 -log trailer has movable banks and bogie frame with a ratchet mechanism and hoops for securing loads. The carefully planned and designed load compartment ensures balanced operation, whatever the conditions.

LED tail lights, 500/17 tyres and brakes available as accessories.

FT9 = 10.3 ton total weight

FARMI FOREST

Technical details	
Load capacity, kg	9000
Load area, m^2	1.9
Own weight, kg	1300
Ground clearance with standard tires, mm	550
Frame tube dimensions, mm	160 x 160 x 8
Steering cylinders, pcs	2
Steering angle, degrees	34
Bolsters, standard, pcs	3
Wheel set, standard	400/60-15,5 14pr
Wheel set, optional	500/50-17 18pr
Suitable crane	CR37/CR47

Options for FT9 trailers

FARMI FOREST

Bolsters	3 pairs	4 pairs	4 pairs + extender	
Couplings	Draw bar down, turning eye	Draw bar down, fixed eye	Draw bar up, turning eye	Draw bar up, fixed eye
Wheels	400/60-15,5, PR14 light rim	500/50-17 PR 18 reinforced		
Road Traffic kit	French	German	Others	
Breaks	Hydraulic Break 2 wheels in & out	Overrun front and hydraulic breaks rear	Pneumatic Breaks 2 wheel	Overrun front breaks
Supply of hydraulics	Tractor Hydraulics	HD unit fixed displacement or load sensing,male	HD unit fixed displacement or load sensing,female	
Control unit	Without operator stand	With operator stand		

Trailer FT9 Options

FARMI FOREST

Extra bolster set

Frame extension

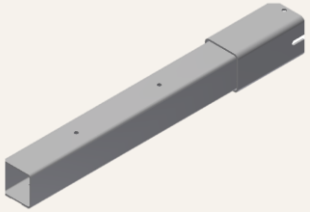

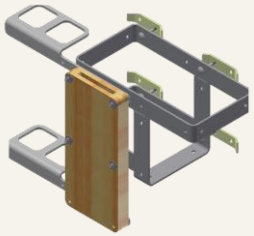

Rack, for chainsaw, axe and combitank

HD unit fixed displacement or load sensing,male
Male pump connection to tractor via PTO shaft

HD unit fixed displacement or load sensing,female
Female pump connection straight to tractor's PTO

500/50-17 PR18 reinforced rim

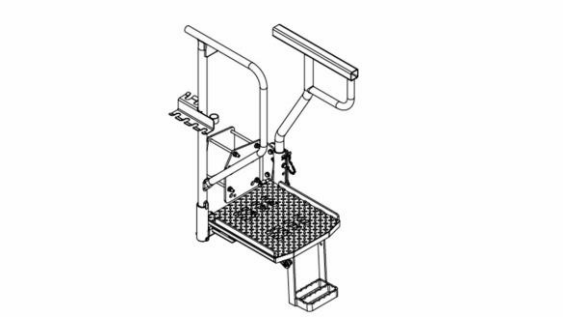

Operator's stand
- Assembly on drawbar

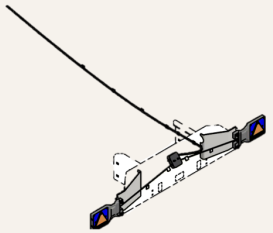

Road Traffic Kit
- includes necessary parts for legal driving on the road, custom structure for each country

Trailer Options, brakes

FARMI FOREST

Hydraulic brakes, 2 wheels IN

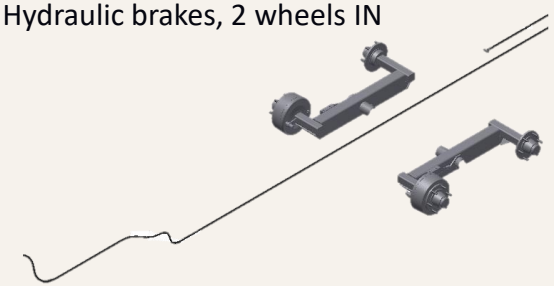

Overrun front brakes

Pneumatic brakes, 4 wheels

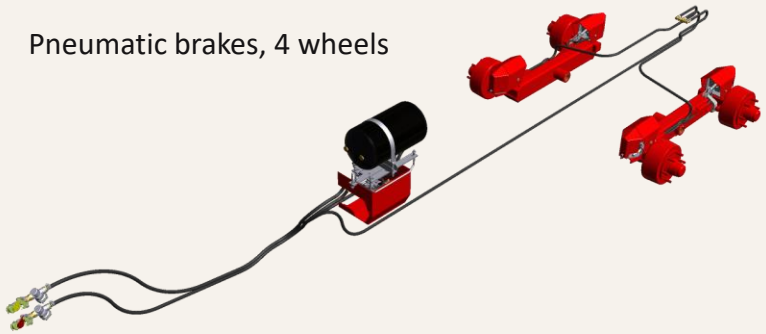

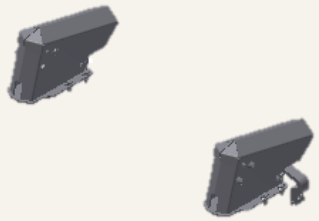

Hydraulic brakes, 2 wheels OUT

Overrun front and
hydraulic rear brakes

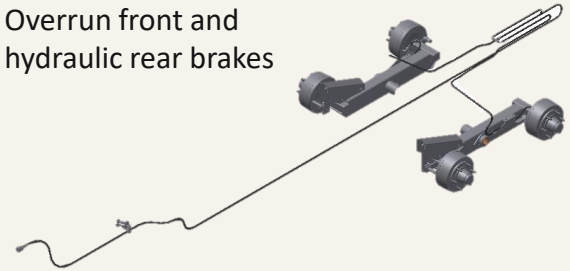

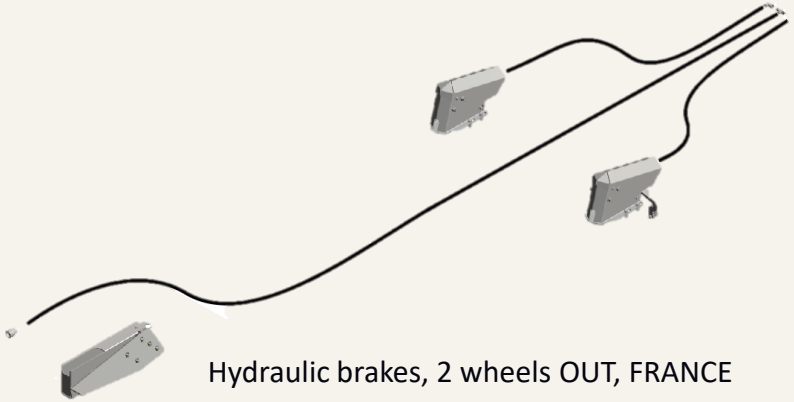

Hydraulic brakes, 2 wheels OUT, FRANCE

Pneumatic brakes, 2 wheels

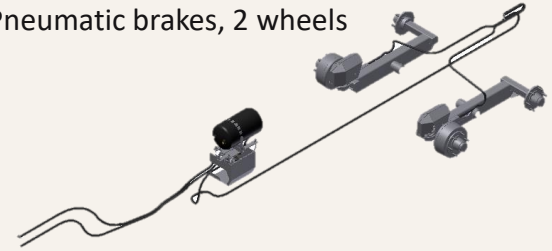

Hydraulic brakes,
4 wheels OUT

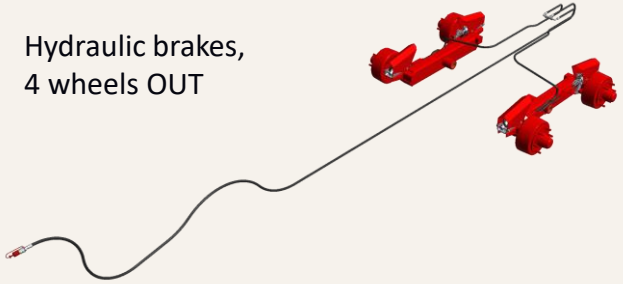

FT9 Shipping details

FARMI FOREST

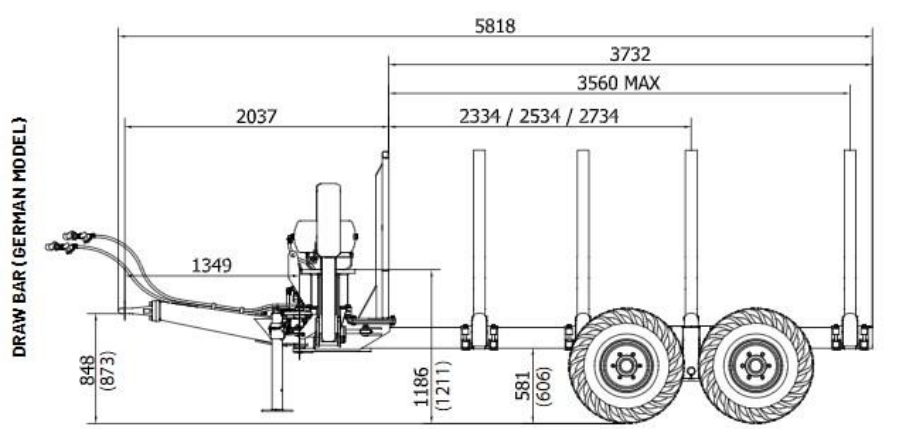

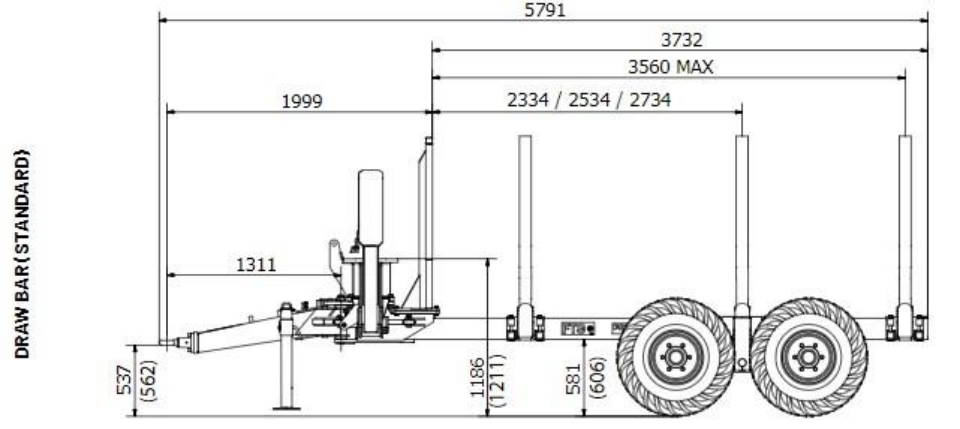

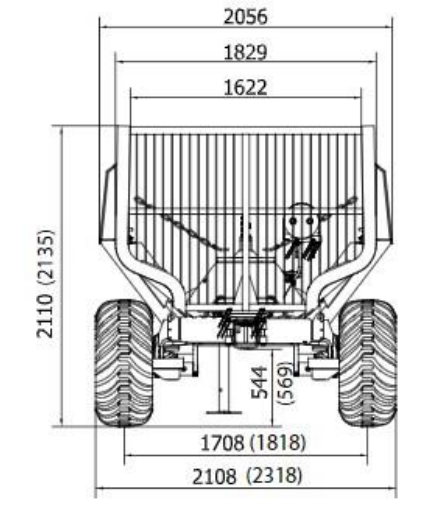

Tyres 400/60-15,5 (500/50-17)

	length	width	height	Gross weight, kg	Volume,m³	Load meter
FT9	5,82	2,10	2,11	1300	25,79	5,82

FT11 – mad strong

When the amount of timber you transport each year exceeds one thousand m3, FT11 is the right choice for your log trailer. The single-beam trailer's carrying capacity is 11 tonnes. The standard package includes 3 beam pairs, removable banks and a bogie. Load compartment length is 4.0 m and the load area is 2.54 m2.

As much specially manufactured steel as possible has been used in manufacturing the trailer.

You can initially purchase FT11 without 4WD equipment as the 4WD system can be retrofitted to the same standard trailer. However, you should choose tyres suitable for a roller drive when purchasing a trailer. The FT11 model is a great fit for the transportation of energy wood and tree thinnings. It can be moved easily in narrow spaces in a thinned forest. The standard equipment includes 500/55-17 tyre, with which the trailer's width is only 229 cm. 400/55-22.5 tyre with 8-bolt hubs and bogie beams are also available. These are the same type as in FT13.

FT11 – total weight 12,8 tons

FARMI FOREST

Technical details	
Load capacity, kg	11000
Load area, m^2	2.54
Own weight, kg	1 580-1 830
Ground clearance, mm	550-640
Frame tube dimensions, mm	200 x 200 x 8
Tractive force , kN (t)	4WD 19 (1.9) 2WD 25 (2.5)
Steering cylinders, pcs	2
Wheel set, standard	500/50-17
Wheel set, optional	400/55-22.5
Suitable crane	CR67, CR69

Options for FT11 trailers

FARMI FOREST

Bolsters	3 pairs	4 pairs	4 pairs + extender	
Couplings	Draw bar down, turning eye	Draw bar down, fixed eye	Draw bar up, turning eye	Draw bar up, fixed eye
Drive	4WD roller drive	2WD hub-drive	Without drive	
Wheels	400/55-22,5, Agri reinforce, 6 holes	500/50-17 PR 18 reinforced		
Road Traffic kit	French	German	Others	
Breaks	Hydraulic Break 2 wheels in & out	Overrun front and hydraulic breaks rear	Pneumatic Breaks 2 wheel	Overrun front breaks
Supply of hydraulics	Tractor Hydraulics	HD unit fixed displacement or load sensing,male	HD unit fixed displacement or load sensing,female	
Control unit	Without operator stand	With Operator stand		

Trailer FT11 Options

FARMI FOREST

Extra bolster set

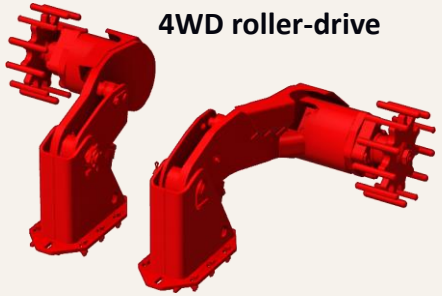

4WD roller-drive

2WD hub-drive (Black Bruin ®)

Road Traffic Kit
- includes necessary parts for legal driving on the road, custom-made structure for each country

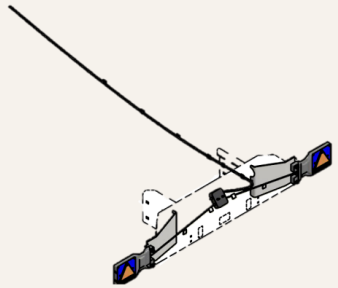

400/55-22.5 reinforced rim

Frame extension

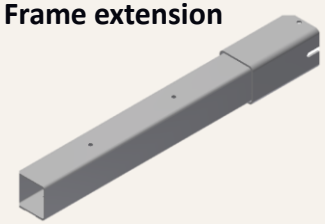

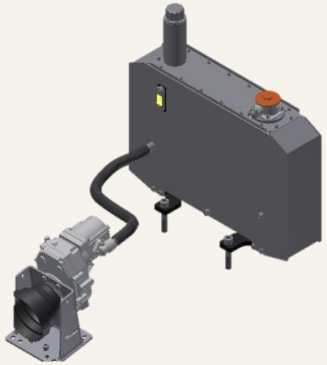

HD unit fixed displacement or load sensing,male
Male pump connection to tractor via PTO shaft

HD unit fixed displacement or load sensing,female
Female pump connection straight to tractor's PTO

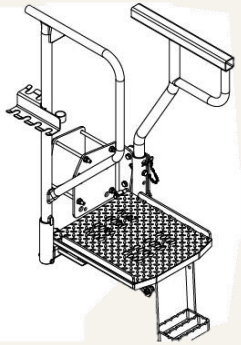

Operator's stand
- Assembly on drawbar

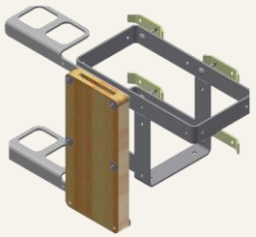

Rack, for chainsaw, axe and combitank

Trailer Options, brakes

FARMI FOREST

Hydraulic brakes, 2 wheels OUT

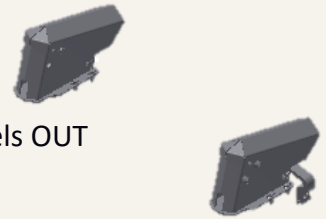

Pneumatic brakes, 4 wheels

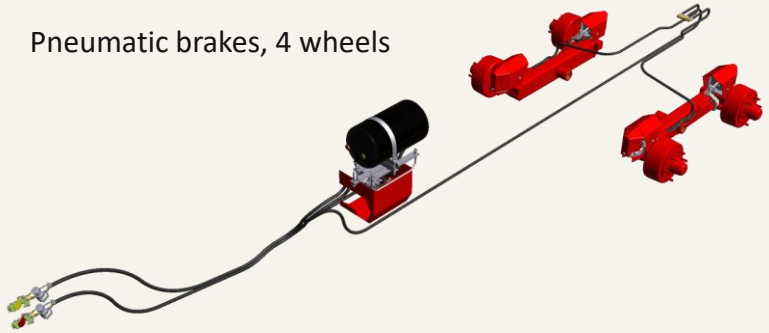

Pneumatic brakes, 2 wheels

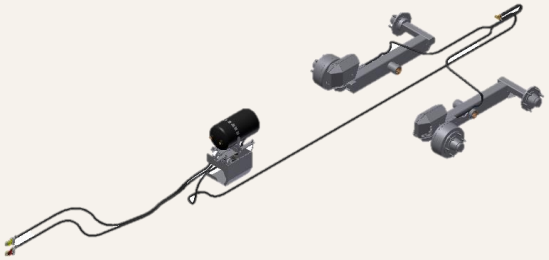

Hydraulic brakes,
4 wheels OUT

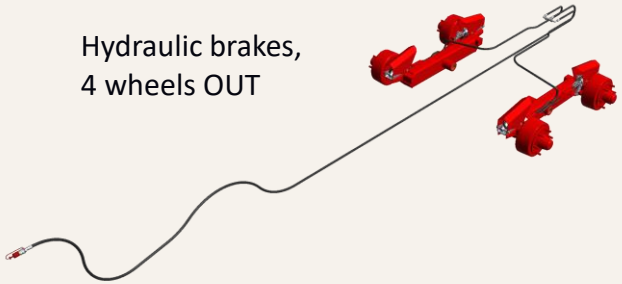

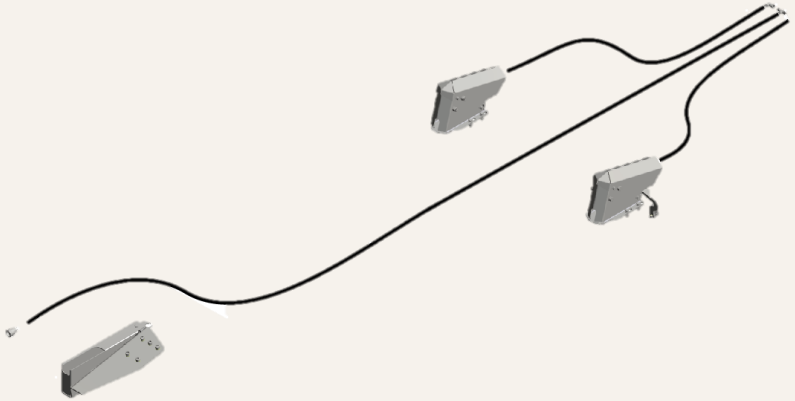

Hydraulic brakes, 2 wheels OUT, FRANCE

FT11 Shipping details

FARMI FOREST

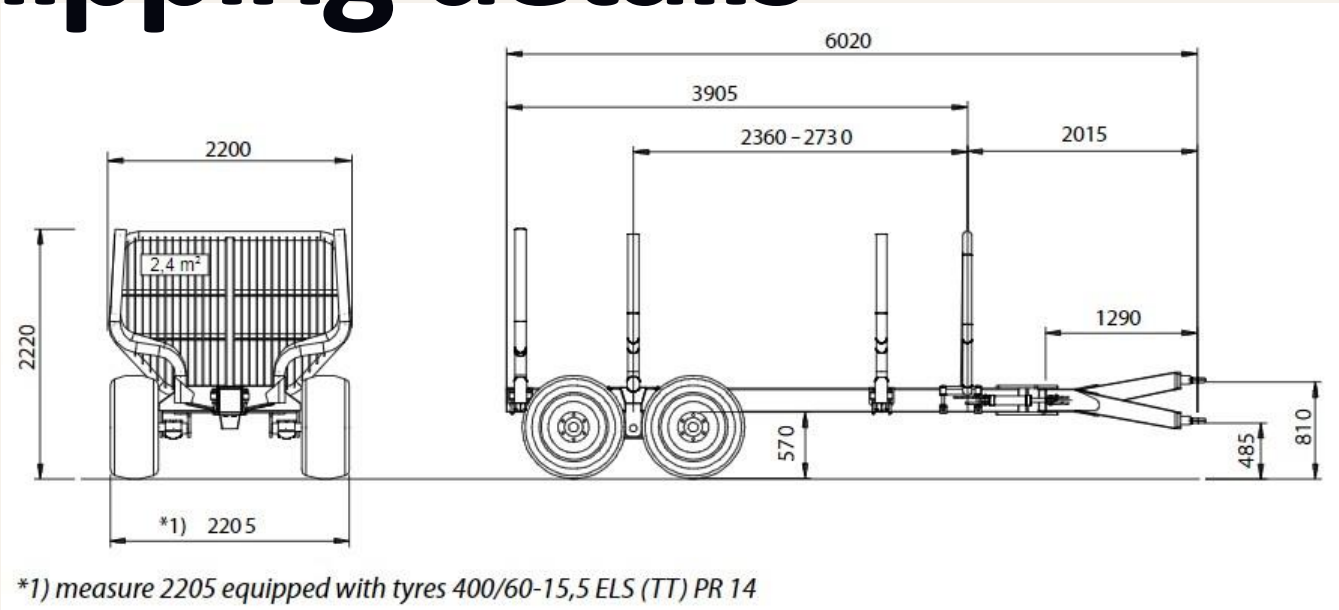

	length	width	height	Gross weight, kg	Volume,m³	Load meter
FT11	6,02	2,20	2,22	1830	29,40	6,02

FT13 – total weight 14,8 tons.

FARMI FOREST

FT13 is for the real wood operations.

FT13 is the right choice for you even if the amount you transport each year exceeds 15,000m3 . The professional use single-beam trailer’s carrying capacity is 13 tonnes. FT13 is not like other trailers out there as it is stronger than anybody in the market and that makes our trailers real work horses of the forests. The standard equipment includes tire 550/45-22.5 and 600/50-22.5 tire is also available as an option.

FT13

FARMI FOREST

Technical details	
Load capacity, kg	13000
Load area, m^2	2.85
Own weight, kg	1 995 -2180
Ground clearance, mm	695
Frame tube dimensions, mm	250 x 250 x 8
Tractive force (4WD), kN (t) (2WD),kN (t)	19 (1.9) 25 (2.5)
Steering cylinders, pcs	2
Wheel set, standard	550/45-22.5
Wheel set, optional	600/50-22.5
Suitable crane	CR87,CR89

Options for FT13 trailers

FARMI FOREST

Bolsters	3 pairs	4 pairs	4 pairs + extender	
Couplings	Draw bar down, turning eye	Draw bar down, fixed eye	Draw bar up, turning eye	Draw bar up, fixed eye
Drive	4WD roller drive	2WD hub-drive	Without drive	
Wheels	550/45-22,5 Agri PR12	600/50-22,5 Agri PR16		
Road Traffic kit	French	German	Others	
Breaks	Hydraulic Break 2 wheels in & out	Overrun front and hydraulic breaks rear	Pneumatic Breaks 2 wheel	Overrun front breaks
Supply of hydraulics	Tractor Hydraulics	HD unit fixed displacement or load sensing,male	HD unit fixed displacement or load sensing,female	

Trailer FT13 Options

FARMI FOREST

Extra bolster set

4WD roller-drive

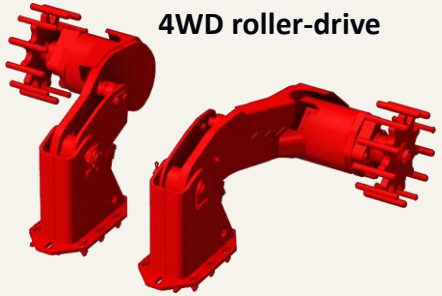

2WD hub-drive (Black Bruin ®)

Road Traffic Kit
- includes necessary parts for legal driving on the road, custom-made structure for each country

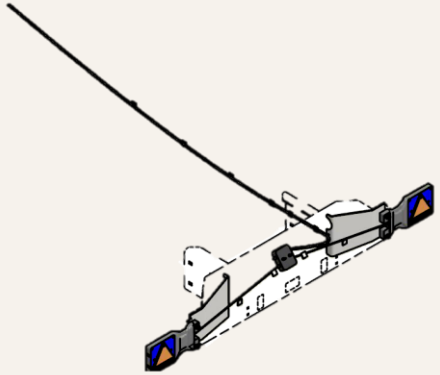

600/50-22,5 reinforced rim

Frame extension

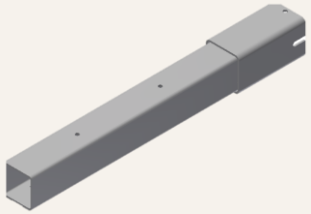

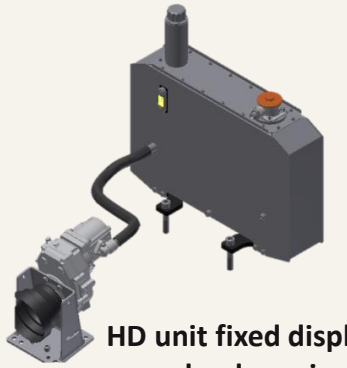

HD unit fixed displacement or load sensing,male
Male pump connection to tractor via PTO shaft

HD unit fixed displacement or load sensing,female
Female pump connection straight to tractor's PTO

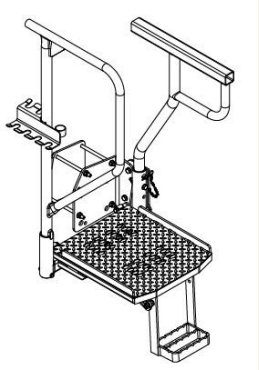

Operator's stand
- Assembly on drawbar

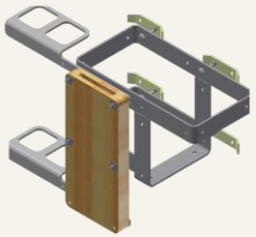

Rack, for chainsaw, axe and combitank

Trailer Options, brakes

FARMI FOREST

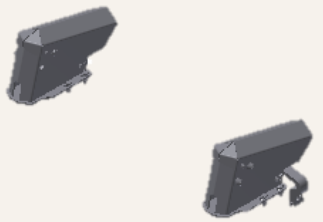

Hydraulic brakes, 2 wheels OUT

Pneumatic brakes, 4 wheels

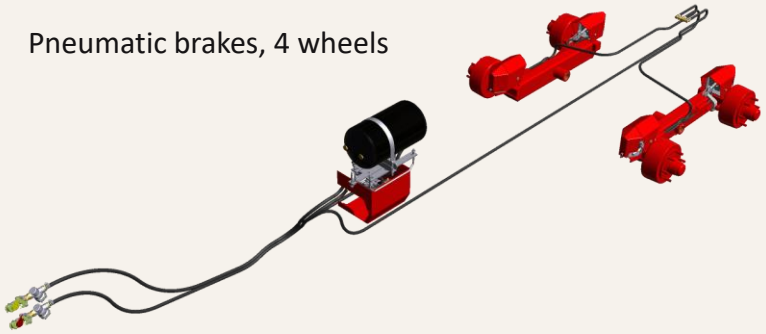

Hydraulic brakes,
4 wheels OUT

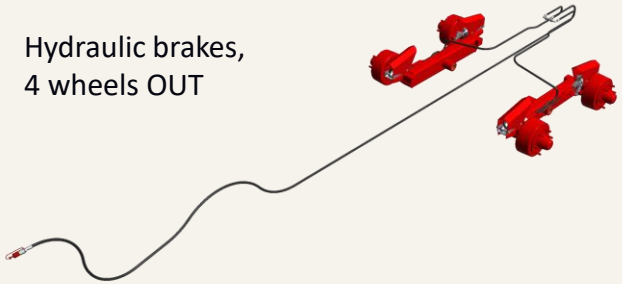

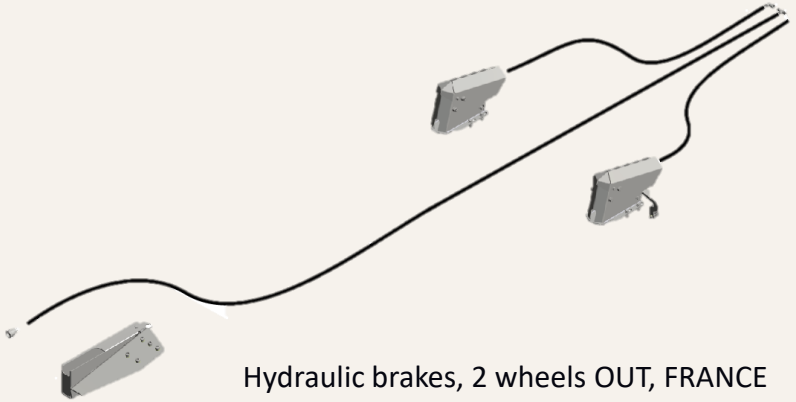

Hydraulic brakes, 2 wheels OUT, FRANCE

Pneumatic brakes, 2 wheels

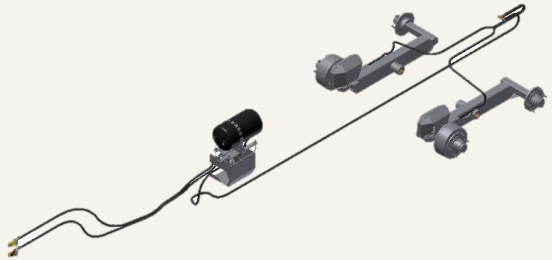

FT13 Shipping details

FARMI FOREST

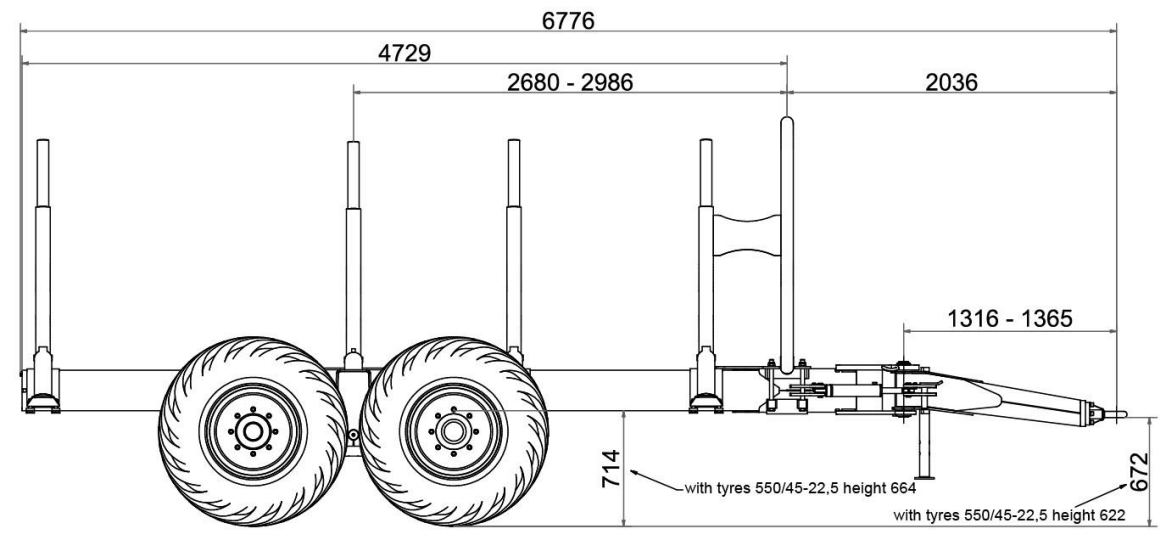

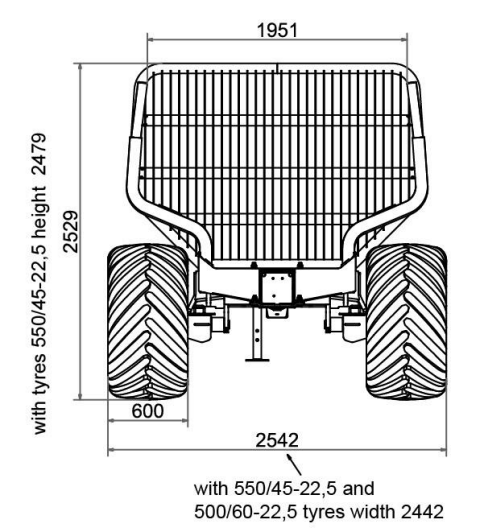

	length	width	height	Gross weight, kg	Volume,m³	Load meter
FT13	6,78	2,55	2,53	2180	43,74	6,78

FARMI'S STRONGEST AND MOST ROBUST TRAILER, FT17, IS COMING UP SOON

FARMI FOREST

CRANES

CR37, CR47, CR67, CR69, CR87, CR89

FARMI CRANES

Our efficient wood cranes have been designed for demanding logging activities, but they also suit for general agricultural use. Our crane range is sure to provide customers with models optimal for their needs. Farmi Forest’s wood cranes have good lifting capacity, reach far and wide, and they are extremely durable – the wood cranes have long service life. We also offer a wide selection of accessories for the entire collection.The cranes are typically installed on a trailer drawbar, which allows the use of the entire crane range and ensures optimal operating radius. In addition to this, cranes can also be attached to a tractor

FARMI FOREST

CR37

CR37

Technical details	
Outreach, m	6,5
Gross lifting torque, kNm, 190 bar	37
Slewing torque, kNm	12
Cross link	CL7325
Rotator	CR 300-F140

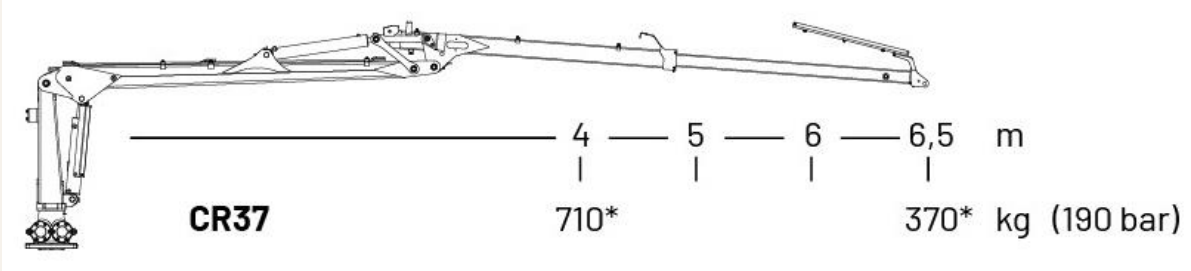

SLEWING DEVICE

FARMI FOREST

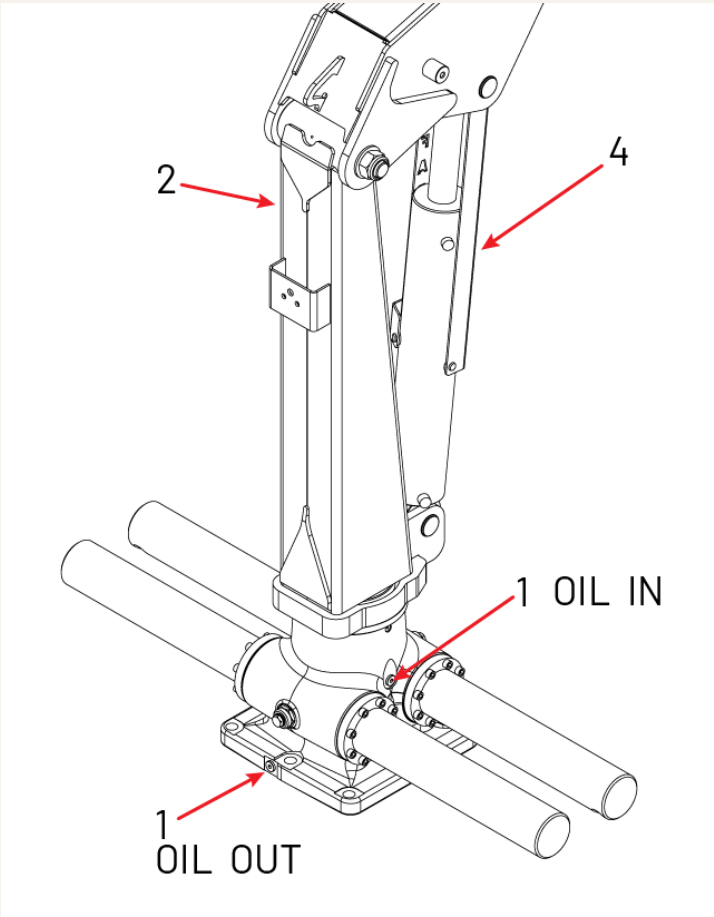

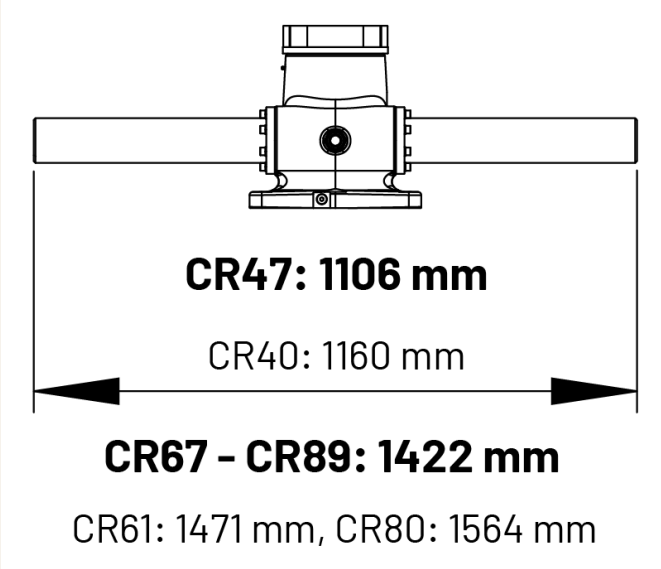

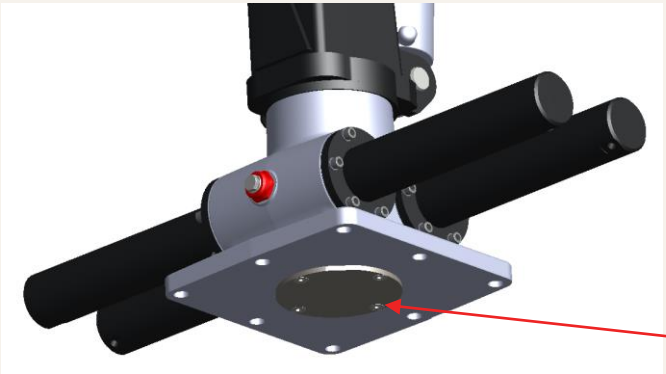

1 **Easy to maintain**
- No need to detach the crane for oil change
- Just open one bolt to run oil out and one to fill in

2 **Better stability**
- Low column CR67-CR89: 1594 mm
  (CR45-CR80: 1634-1674 mm)
  CR47: 1300 mm (CR40-CR46: 1460-1507 mm)

3 **Compact, space saving**
- Shorter cylinders

4 **Lifting cylinder protected with cover**

5 **Same slewing device**
- CR67, CR69, CR87, CR89
  → Much more easier to maintain and less spare parts in stock → more profitable

6 **The same dimension of each base**
- Same mounting plate OR same support legs
- Note: CR47 requires space (10mm*205mm) underneath

7 **Raw materials**
- Slewing gear 42CrMo4+QT (quenced and temperad)
- Gearrack 42CrMo4

LIFTING BOOM

FARMI FOREST

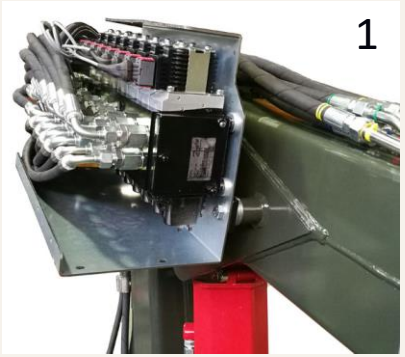

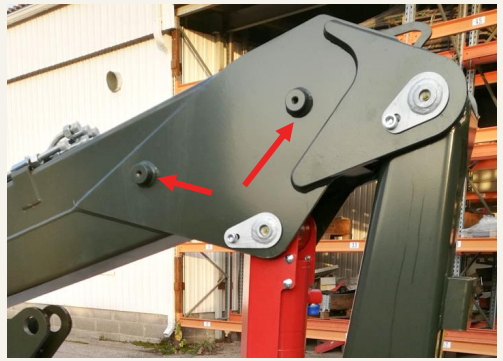

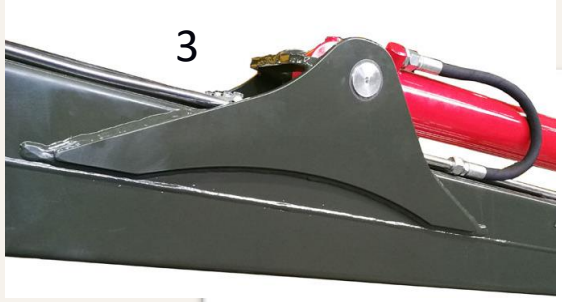

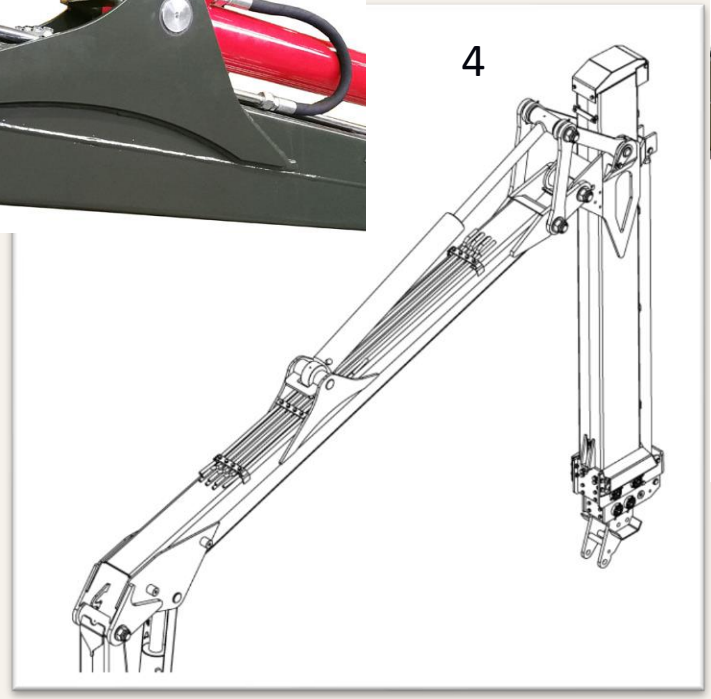

1 **Control valve mounting**

- On the left or right side of the lifting boom
- For Electric Pilot valves

2 **Hydraulic winch mounting on the lifting boom**

- Valve unit can be mounted on the left side on the lifting boom

3 **More durable cylinder brackets**

- Smaller stress points because of the longer brackets
- Easy on the eye

4 **Wide angle joints -> efficient lifting geometry**

5 **Lifting cylinder protected with cover**

FOLDING BOOM

FARMI FOREST

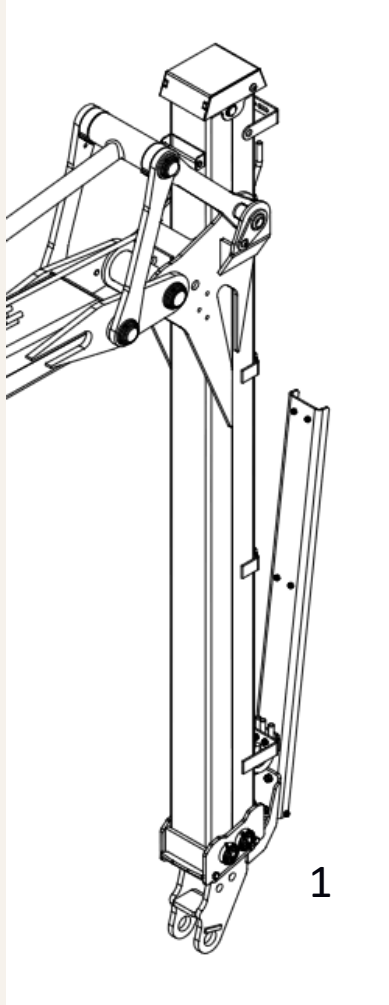

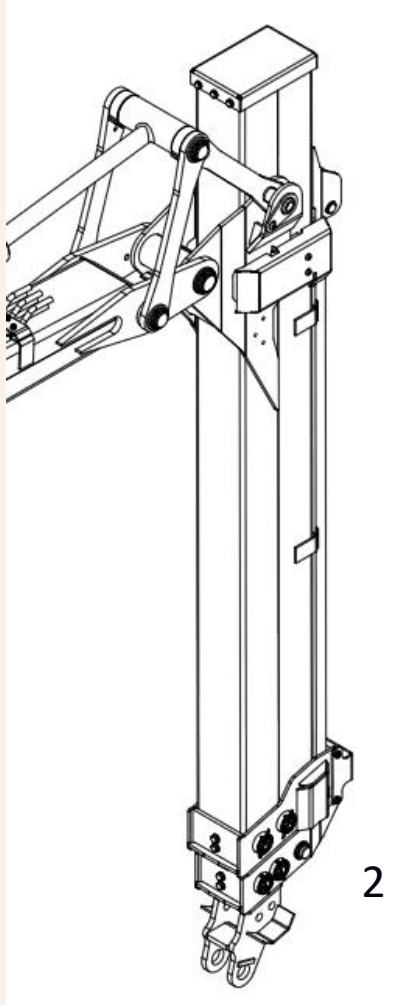

1 **CR47, CR67, CR87**

- Hose channel: Better protection for hydraulic hoses

2 **CR69, CR89**

- Hydraulic hoses inside the boom

3 **Boom end and rotator hoses are protected**

4 **Adjustable sliding pieces on vertical surfaces**

DURABILITY

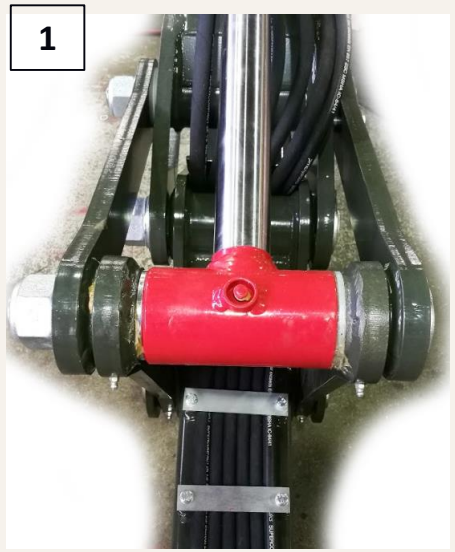

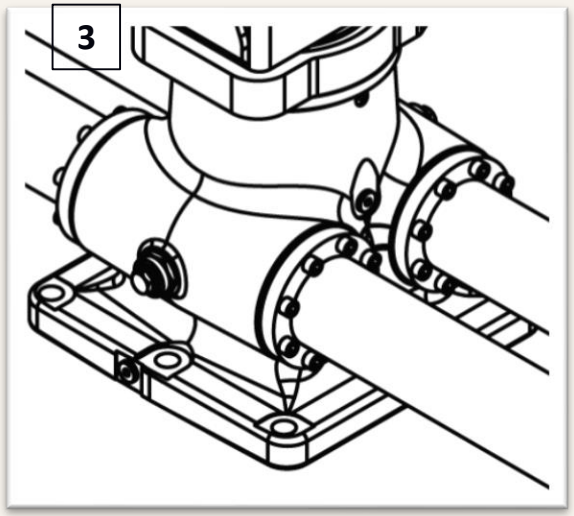

1 **Wide, durable joints**

2 **All pin ends galvanized**

3 **Cast slewing device frame**

4 **Cranes made out of high strength steel**

- 85 % high strength steel
- Thicker plates S355

VALVES

FARMI FOREST

1

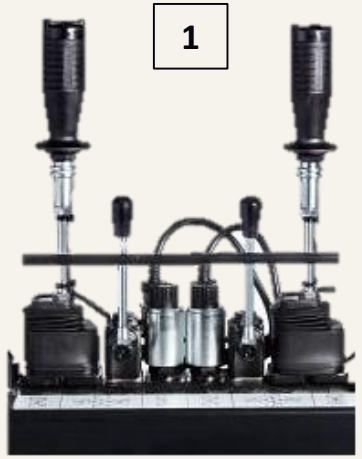

LEC

2

HPC

3

Minijoystics

4

Remote Control

1 Mechanic Control Valve with ON/OFF switches for grapple and boom extension (LEC).

2 Hydraulic Pilot Control Valve (HPC)
Smooth, sensitive operation - like excavator control.

3 Electro-hydraulic valve with minijoystics.

4 Remote Control (Electric Valve with remote control)

FARMI FOREST

CR37 Shipping dimensions / 1 pc

	length	width	height	Gross weight, kg	Volume,m^3	Load meter
CR37	4,00	1,11	1,55	831	6,88	1,85

FARMI FOREST

CR47

CR47/CR37 CRANE

You can choose either CR37 or CR47 for your FT9. Both are highly efficient and light high-performance cranes. The booms are made 85% of high strength steel. They have a robust die cast gear house and the oil drain cap makes maintenance easy. The crane’s standard equipment also includes a lift cylinder cover. Both CR37 and CR47 cranes have very low design. Combining for example the CR47 crane with the Farmi log trailer will enable you to maintain low height for the entire machine solution; for instance, the height of a FT9+CR47 combo is just 262 cm. The low height ensures a low centre of gravity and balanced operation, whether the machine is empty or loaded. You can choose TG16 grapple for your CR37 and CR47 and TG18 for CR47. The flanged model rotator enables providing protection for the grapple hoses. The grapple penetrates stacks efficiently and does not turn the final logs into a grid formation. The grapple and pins are made of specially manufactured steel. Thanks to the grapple’s reinforced jaws, itcan also be used for handling stones.

Valves: on/off, Fully Mechanic Control, Hydraulic Pilot Control, Electric Pilot Control, Remote Control..

FARMI FOREST

CR47

Technical details	
Outreach, m	6,9
Gross lifting torque, kNm, 190 bar	46
Slewing torque, kNm	12
Slewing angle, º	360
Weight, kg**	630
Cross link	CDBL7325
Rotator	CR300
Grapple	TG18
Lifting cylinder	Ø100/50
Folding cylinder	Ø80/40
Extension cylinder	Ø40/28
Recommended pump capacity, l/ min	30-60

**excluding link, rotator, grapple and valve

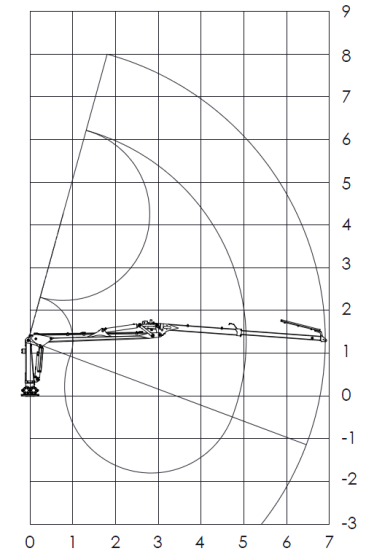

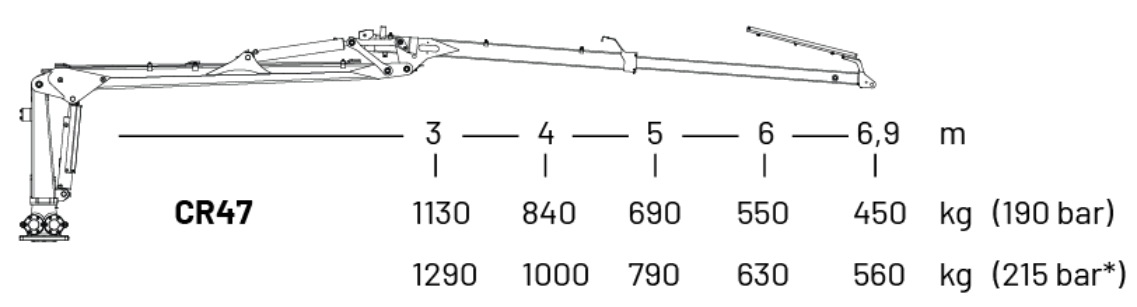

*) Farmi doesn't allow dealers to adjust cranes for high-pressure (over 190 bar) use.
If bigger lifting power needed, please, contact with Farmi sales department.

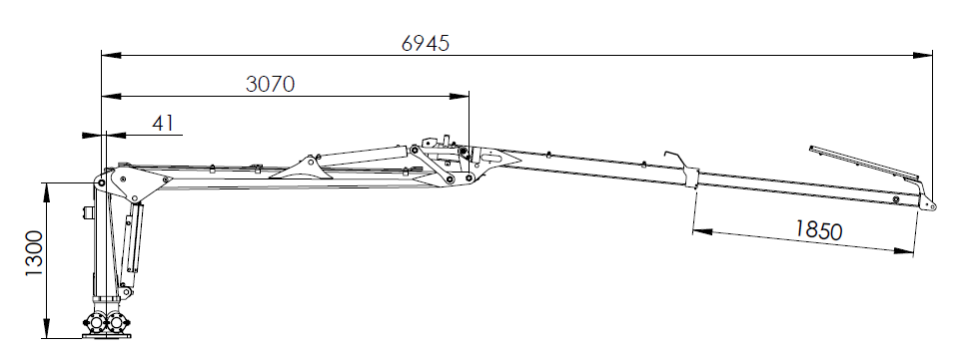

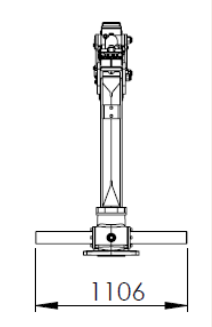

SUPPORT LEGS

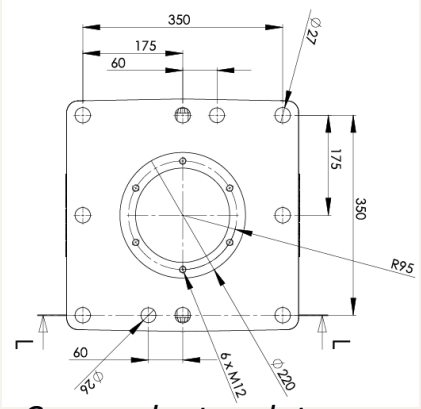

Crane adapter plate

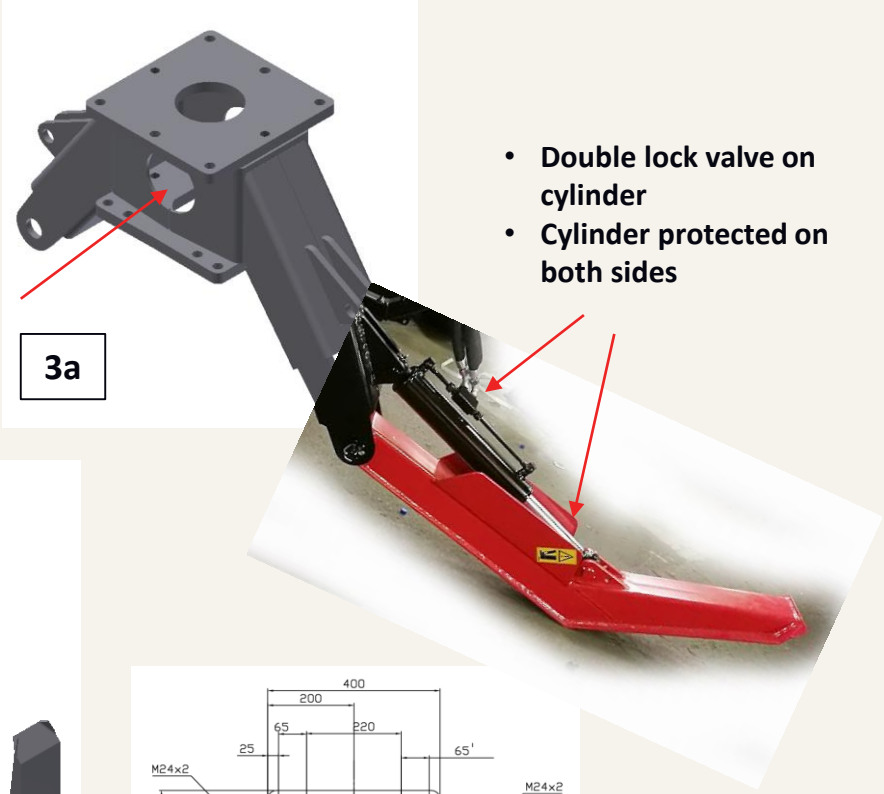

- **Double lock valve on cylinder**
- **Cylinder protected on both sides**

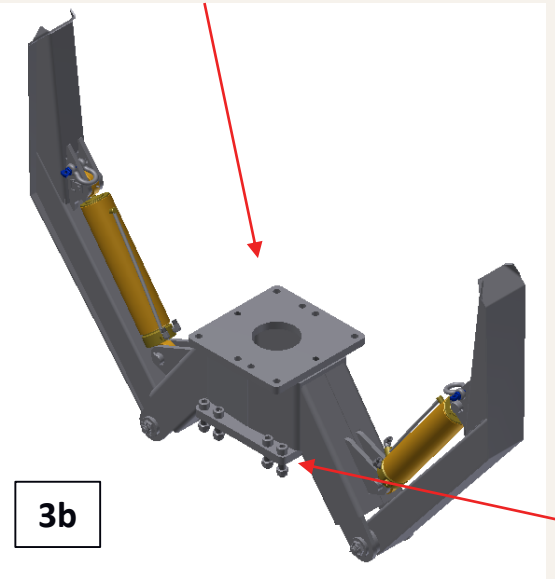

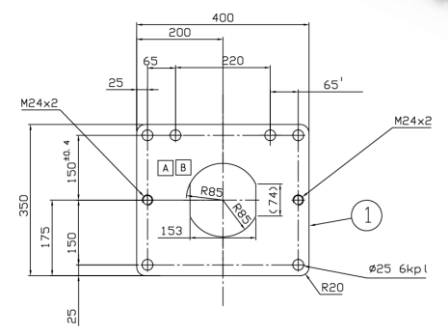

Trailer adapter plate

1 **Better ground clearance than A-leg when trailer is tilting**

2 **Load carrying capacity increases when the legs are lowered**

3 **Two models of support legs:**

(3a) Basic (previous Vario) and

(3b) Heavy Duty for CR8-serie cranes

- Stated to be durable
- Now **Basic** legs always with the hole for HD suction hose or PTO shaft line through the legs' frame

4 **3-point linkage available**

- Recommended only for CR47

5 **Same slewing device**

- CR67, CR69, CR87, CR89

SLEWING DEVICE

FARMI FOREST

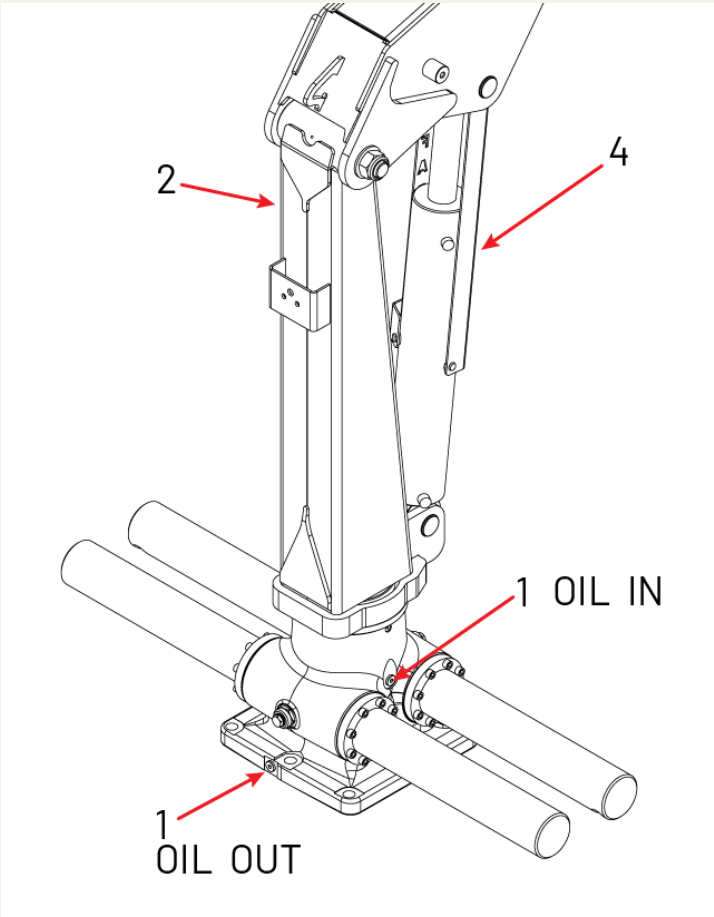

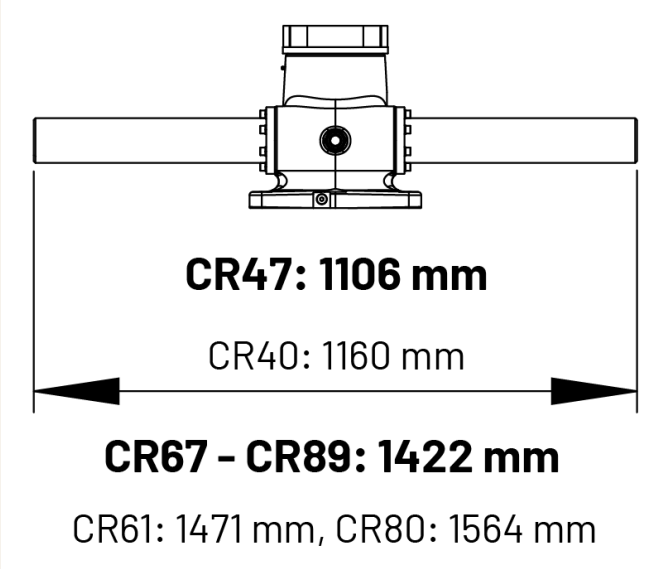

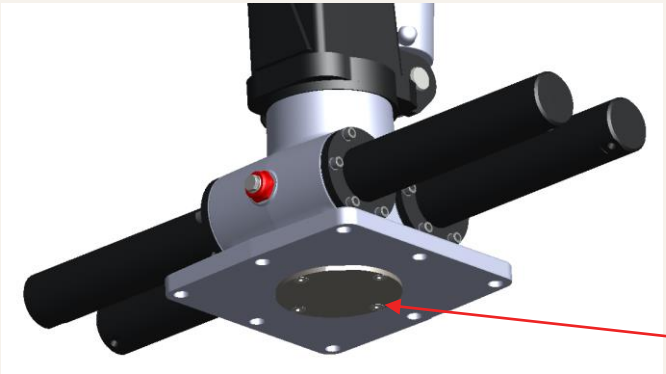

1 **Easy to maintain**
- No need to detach the crane for oil change
- Just open one bolt to run oil out and one to fill in

2 **Better stability**
- Low column CR67-CR89: 1594 mm
  (CR45-CR80: 1634-1674 mm)
  CR47: 1300 mm (CR40-CR46: 1460-1507 mm)

3 **Compact, space saving**
- Shorter cylinders

4 **Lifting cylinder protected with cover**

5 **Same slewing device**
- CR67, CR69, CR87, CR89
  → Much more easier to maintain and less spare parts in stock → more profitable

6 **The same dimension of each base**
- Same mounting plate OR same support legs
- Note: CR47 requires space (10mm*205mm) underneath

7 **Raw materials**
- Slewing gear 42CrMo4+QT (quenced and temperad)
- Gearrack 42CrMo4

LIFTING BOOM

FARMI FOREST

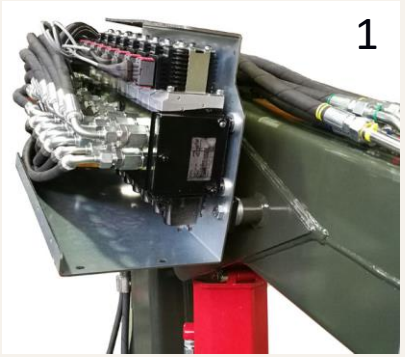

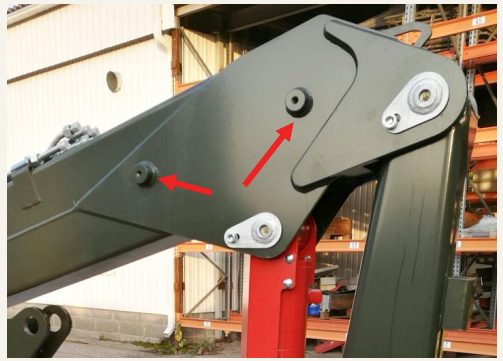

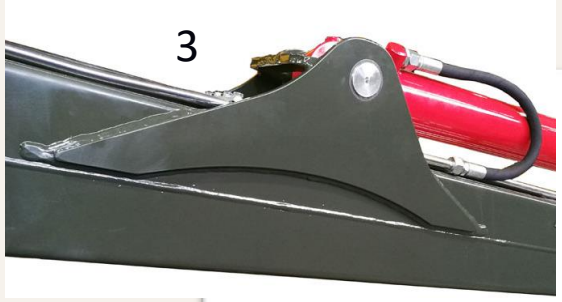

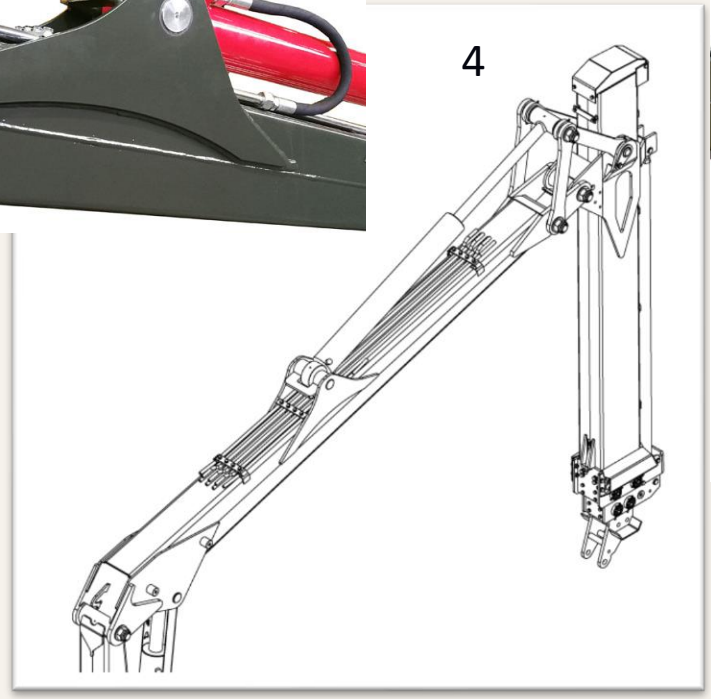

1 **Control valve mounting**

- On the left or right side of the lifting boom
- For Electric Pilot valves

2 **Hydraulic winch mounting on the lifting boom**

- Valve unit can be mounted on the left side on the lifting boom

3 **More durable cylinder brackets**

- Smaller stress points because of the longer brackets
- Easy on the eye

4 **Wide angle joints -> efficient lifting geometry**

5 **Lifting cylinder protected with cover**

FOLDING BOOM

FARMI FOREST

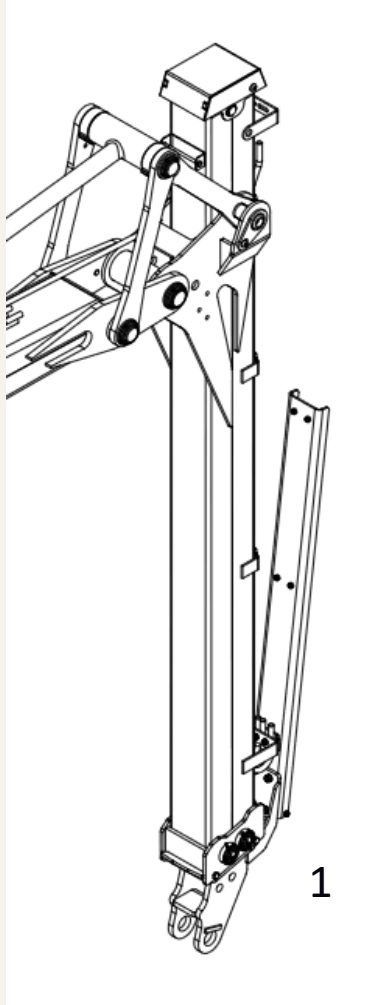

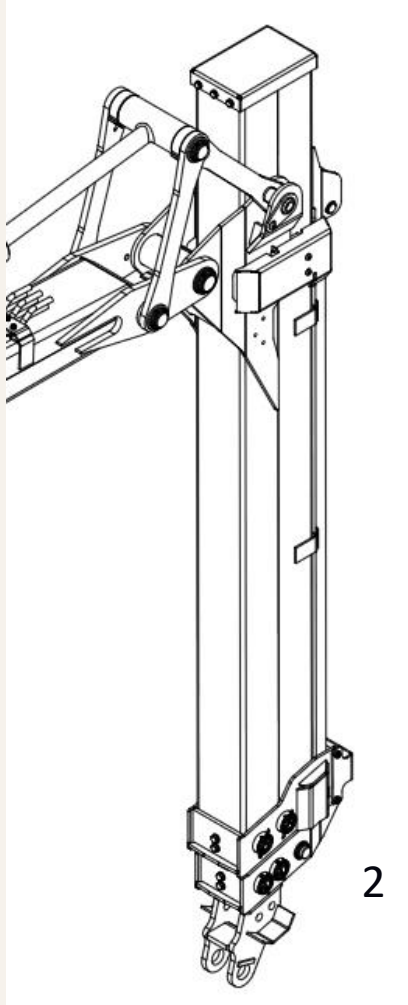

1 **CR47, CR67, CR87**

- Hose channel: Better protection for hydraulic hoses

2 **CR69, CR89**

- Hydraulic hoses inside the boom

3 **Boom end and rotator hoses are protected**

4 **Adjustable sliding pieces on vertical surfaces**

DURABILITY

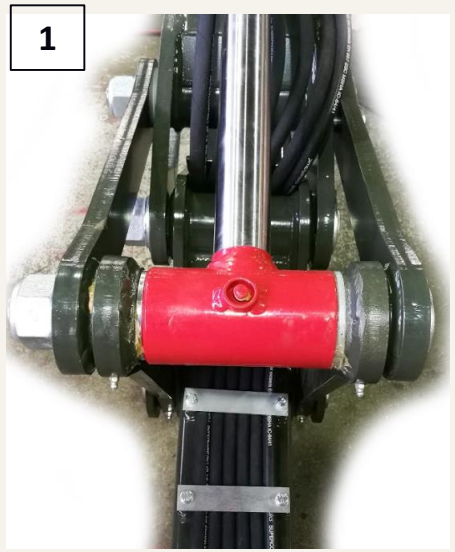

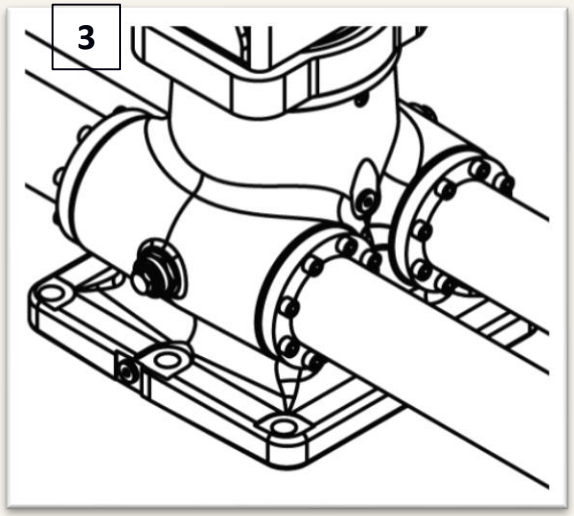

1 **Wide, durable joints**

2 **All pin ends galvanized**

3 **Cast slewing device frame**

4 **Cranes made out of high strength steel**

- 85 % high strength steel
- Thicker plates S355

VALVES

FARMI FOREST

1

LEC

2

HPC

3

Minijoystics

4

Remote Control

1 Mechanic Control Valve with ON/OFF switches for grapple and boom extension (LEC).

2 Hydraulic Pilot Control Valve (HPC)
Smooth, sensitive operation - like excavator control.

3 Electro-hydraulic valve with minijoystics.

4 Remote Control (Electric Pilot Control Valve with remote control)

FARMI FOREST

CR47 Shipping dimensions / 1 pc

	length	width	height	Gross weight, kg	Volume,m^3	Load meter
CR47	4,00	1,11	1,55	831	6,88	1,85

FARMI FOREST

CR67

CR67 CRANE

The CR67 crane creates efficiency and high performance. The booms are made 85% of high strength steel. Crane has a robust and powerful die cast gear house and the oil drain cap makes maintenance easy. Standard equipment includes an electrically controlled valve on the side of the crane boom. The crane’s standard equipment also includes a lift cylinder cover. Rotator hoses are well protected at the boom end. For CR67 you can choose either TG18, BG21 or TG23 grapple, which all have an efficient and functional design. The flanged model rotator enables providing protection for the grapple hoses. The grapple penetrates stacks efficiently and does not turn the final logs into a grid formation. The grapple and pins are made of specially manufactured steel. Thanks to the grapple’s reinforced jaws, it can also be used for handling stones.

Valves: On/Off, Hydraulic Pilot Control, Electric Pilot Control, Remote Control.

FARMI FOREST

CR67

Technical details	
Outreach, m	7,2
Gross lifting torque, kNm, 190 bar	57
Slewing torque, kNm	19
Slewing angle, o	380
Weight, kg**	940
Cross link	CDBL7325
Rotator	CR404
Grapple	TG18/TG23
Lifting cylinder	Ø100/60
Folding cylinder	Ø90/50
Extension cylinder	Ø45/30
Recommended pump capacity, l/ min	50-90

**excluding link, rotator, grapple and valve

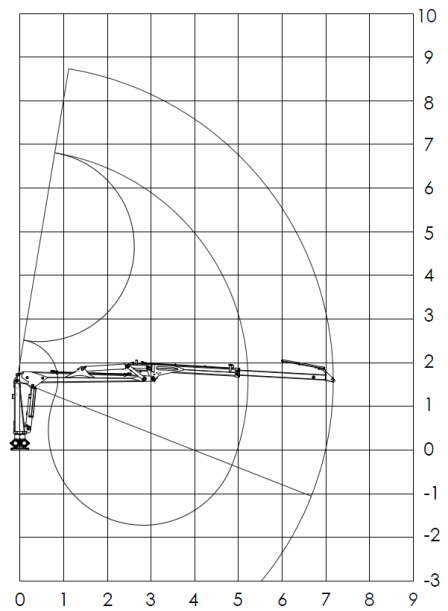

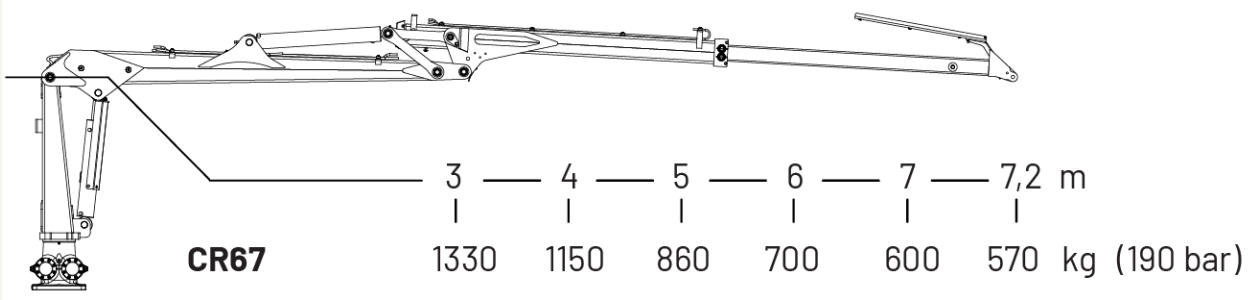

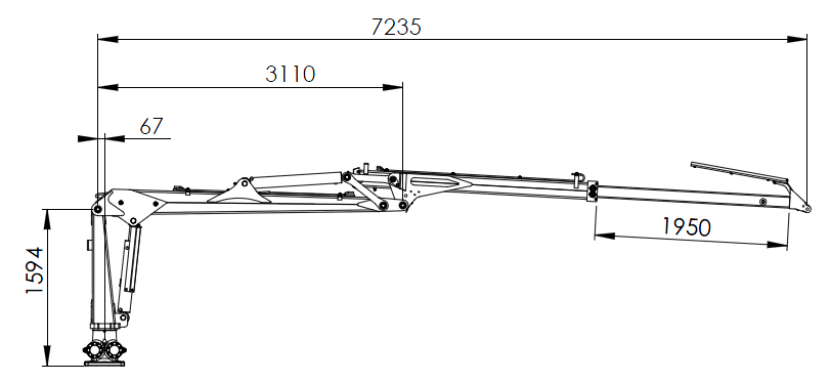

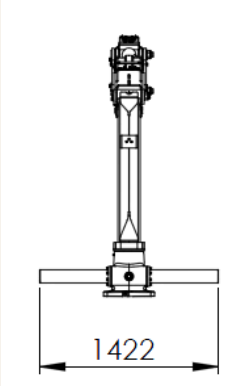

SUPPORT LEGS

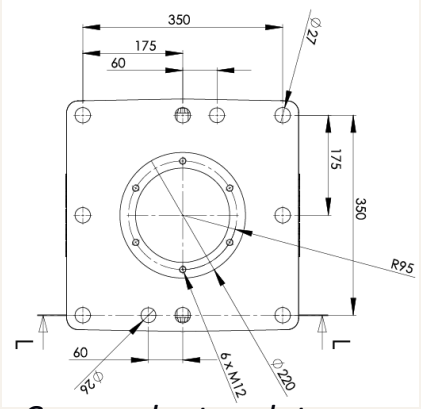

Crane adapter plate

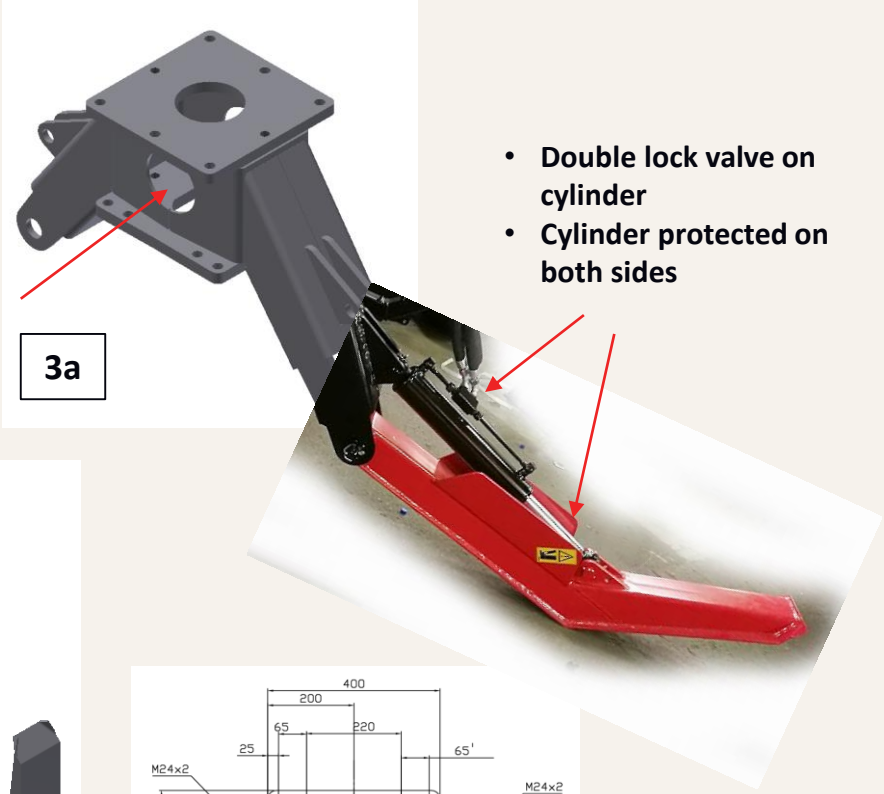

- **Double lock valve on cylinder**
- **Cylinder protected on both sides**

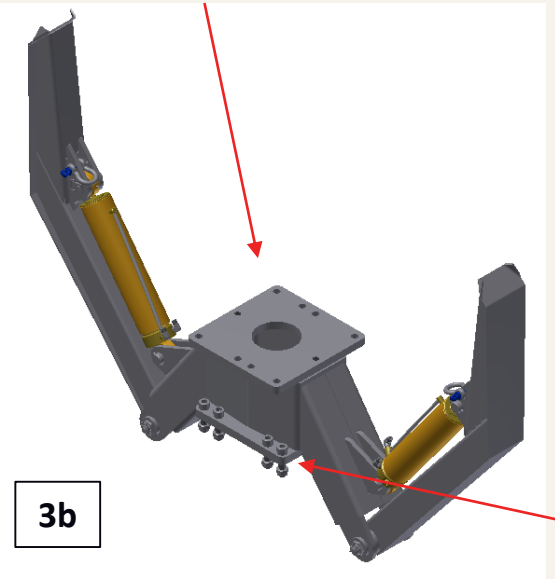

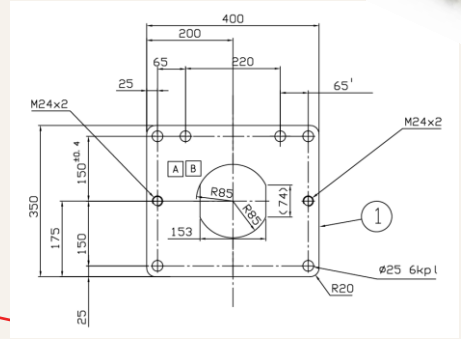

Trailer adapter plate

FARMI FOREST

1 **Better ground clearance than A-leg when trailer is tilting**

2 **Load carrying capacity increases when the legs are lowered**

3 **Two models of support legs:**

(3a) Basic (previous Vario) and

(3b) Heavy Duty for CR8-serie cranes

- Stated to be durable
- Now **Basic** legs always with the hole for HD suction hose or PTO shaft line through the legs' frame

4 **3-point lingkage available**

- Recommended only for CR47

5 **Same slewing device**

- CR67, CR69, CR87, CR89

SLEWING DEVICE

FARMI FOREST

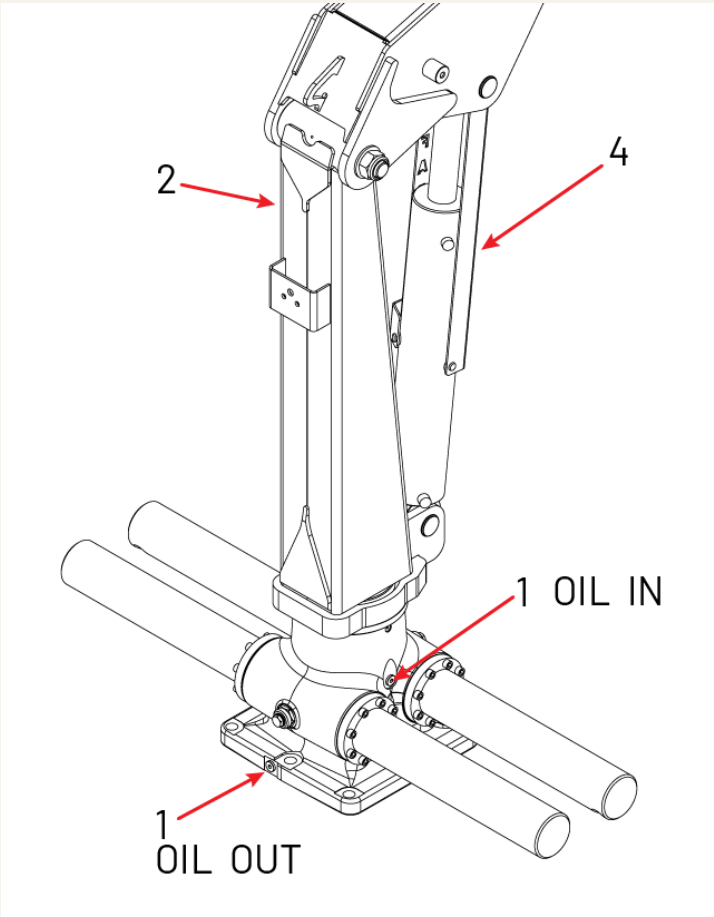

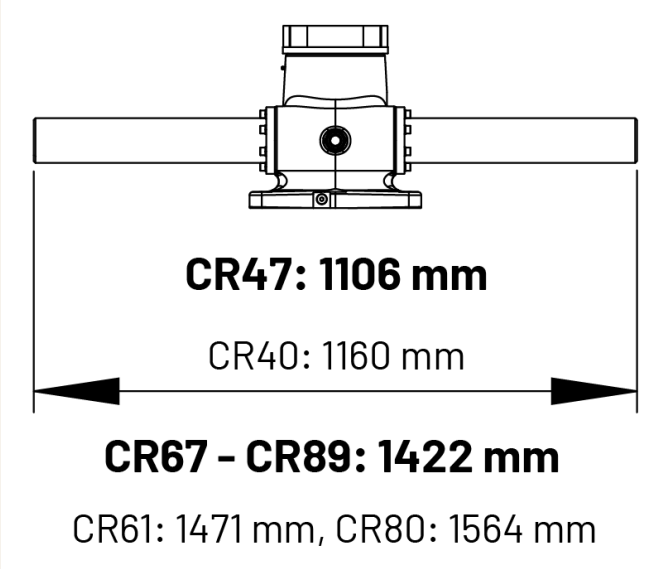

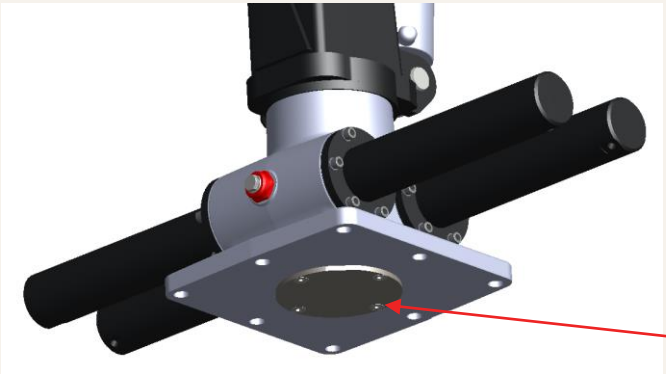

1 **Easy to maintain**
- No need to detach the crane for oil change
- Just open one bolt to run oil out and one to fill in

2 **Better stability**
- Low column CR67-CR89: 1594 mm
  (CR45-CR80: 1634-1674 mm)
  CR47: 1300 mm (CR40-CR46: 1460-1507 mm)

3 **Compact, space saving**
- Shorter cylinders

4 **Lifting cylinder protected with cover**

5 **Same slewing device**
- CR67, CR69, CR87, CR89
  → Much more easier to maintain and less spare parts in stock → more profitable

6 **The same dimension of each base**
- Same mounting plate OR same support legs
- Note: CR47 requires space (10mm*205mm) underneath

7 **Raw materials**
- Slewing gear 42CrMo4+QT (quenced and temperad)
- Gearrack 42CrMo4

LIFTING BOOM

FARMI FOREST

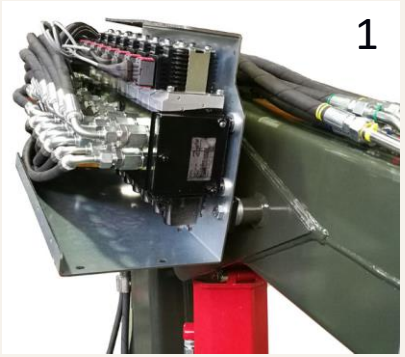

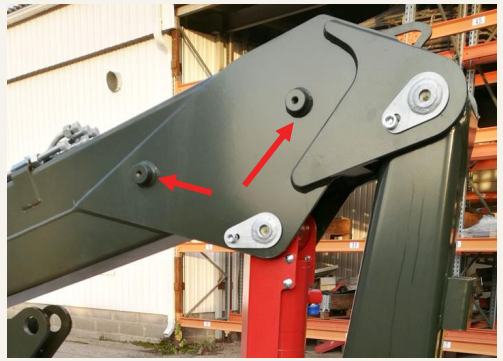

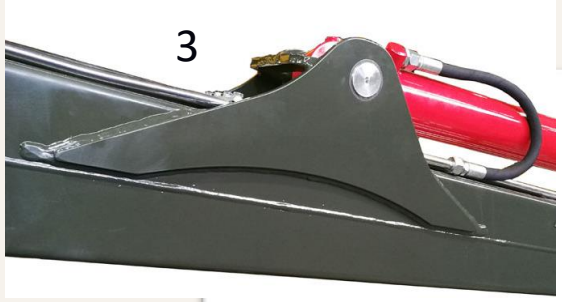

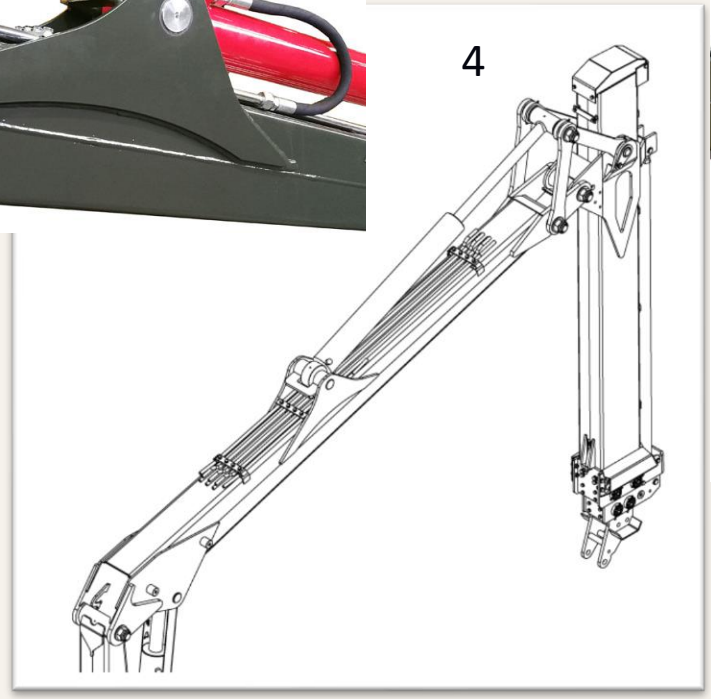

1 **Control valve mounting**

- On the left or right side of the lifting boom
- For Electric Pilot valves

2 **Hydraulic winch mounting on the lifting boom**

- Valve unit can be mounted on the left side on the lifting boom

3 **More durable cylinder brackets**

- Smaller stress points because of the longer brackets
- Easy on the eye

4 **Wide angle joints -> efficient lifting geometry**

5 **Lifting cylinder protected with cover**

FOLDING BOOM

FARMI FOREST

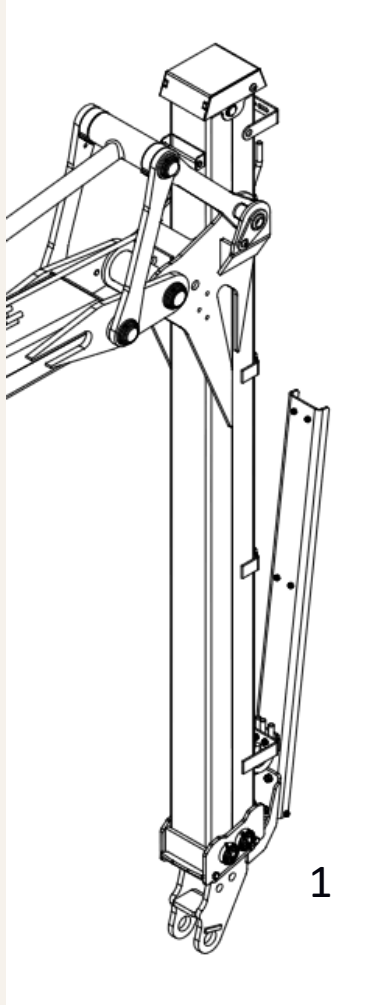

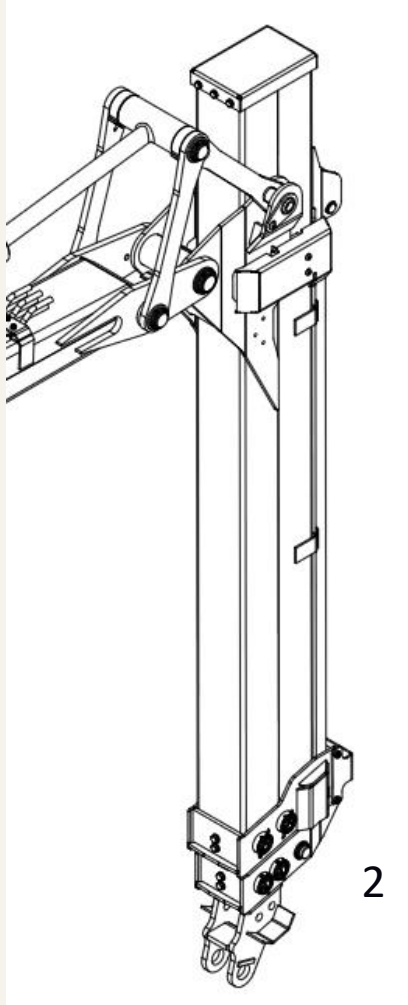

1 **CR47, CR67, CR87**

- Hose channel: Better protection for hydraulic hoses

2 **CR69, CR89**

- Hydraulic hoses inside the boom

3 **Boom end and rotator hoses are protected**

4 **Adjustable sliding pieces on vertical surfaces**

DURABILITY

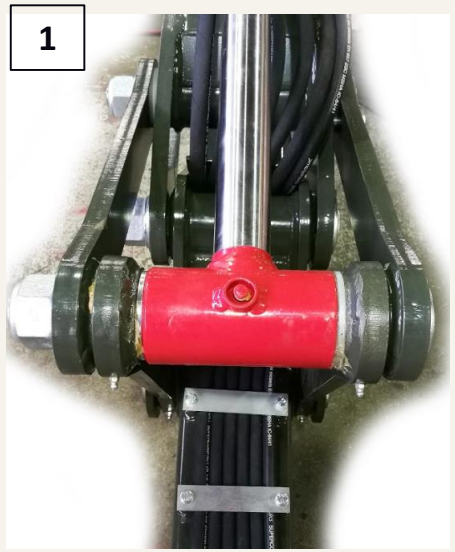

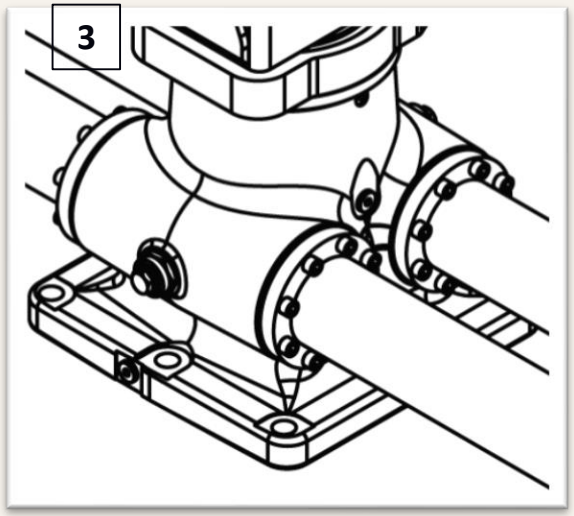

1 **Wide, durable joints**

2 **All pin ends galvanized**

3 **Cast slewing device frame**

4 **Cranes made out of high strength steel**

- 85 % high strength steel
- Thicker plates S355

VALVES

FARMI FOREST

1

LEC

2

HPC

3

Minijoystics

4

Remote Control

1 Mechanic Control Valve with ON/OFF switches for grapple and boom extension (LEC).

2 Hydraulic Pilot Control Valve (HPC)
Smooth, sensitive operation - like excavator control.

3 Electro-hydraulic valve with minijoystics.

4 Remote Control (Electric Pilot Control Valve with remote control)

FARMI FOREST

CR67 Shipping dimensions / 1 pc

	length	width	height	Gross weight, kg	Volume,m^3	Load meter
CR67	4,00	1,45	1,84	1167	10,67	2,42

FARMI FOREST

CR69

CR69 CRANE

FARMI FOREST

The CR69 crane creates efficiency and high performance. The booms are made 85% of high strength steel. Crane has a robust and powerful die cast gear house and the oil drain cap makes maintenance easy. Standard equipment includes an electrically controlled valve on the side of the crane boom. The crane's standard equipment also includes a lift cylinder cover. CR69 has the hosing for the double extension inside the extension. Rotator hoses are well protected at the boom end. For CR69 you can choose either TG18, BG21 or TG23 grapple, which all have an efficient and functional design. The flanged model rotator enables providing protection for the grapple hoses. The grapple penetrates stacks efficiently and does not turn the final logs into a grid formation. The grapple and pins are made of specially manufactured steel. Thanks to the grapple's reinforced jaws, it can also be used for handling stones.

Valves: On/Off, Hydraulic Pilot Control, Electric Pilot Control, Remote Control.

FARMI FOREST

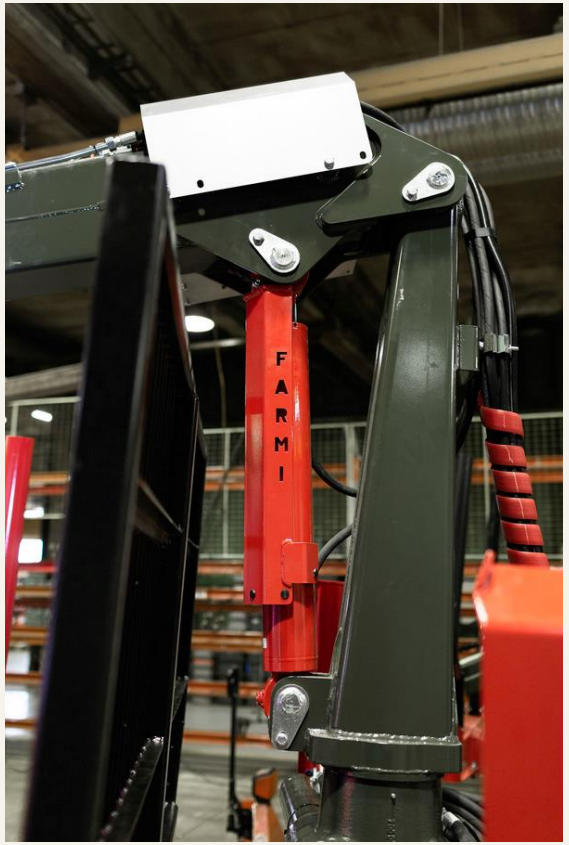

CR69

Technical details	
Outreach, m	8,5
Gross lifting torque, kNm, 190 bar	57
Slewing torque, kNm	19
Slewing angle, o	380
Weight, kg**	1060
Cross link	CDBL7325
Rotator	CR404
Grapple	TG18,BG21,TG23
Lifting cylinder	Ø100/60
Folding cylinder	Ø90/50
Extension cylinder	Ø55/36
Recommended pump capacity, l/ min	50-90

**excluding link, rotator, grapple and valve

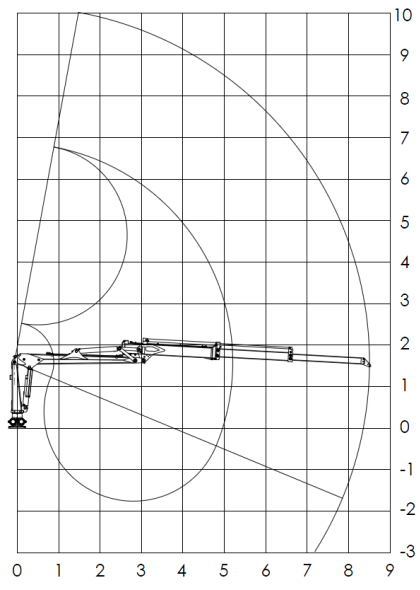

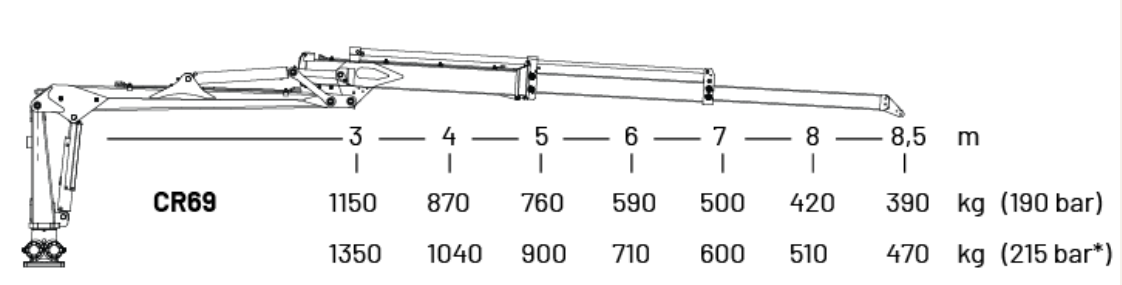

*) Farmi doesn't allow dealers to adjust cranes for high-pressure (over 190 bar) use.
If bigger lifting power needed, please, contact with Farmi sales department.

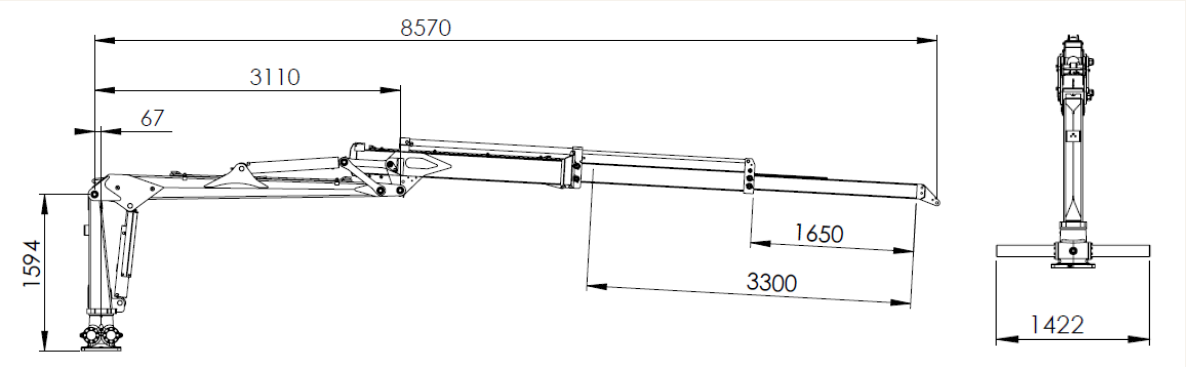

SUPPORT LEGS

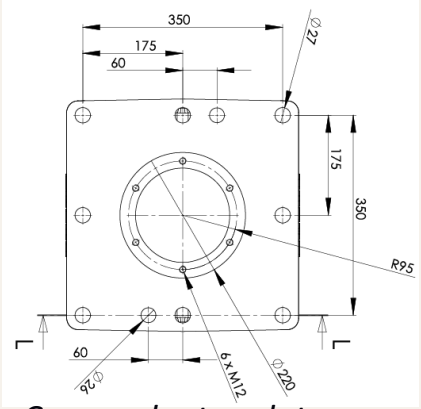

Crane adapter plate

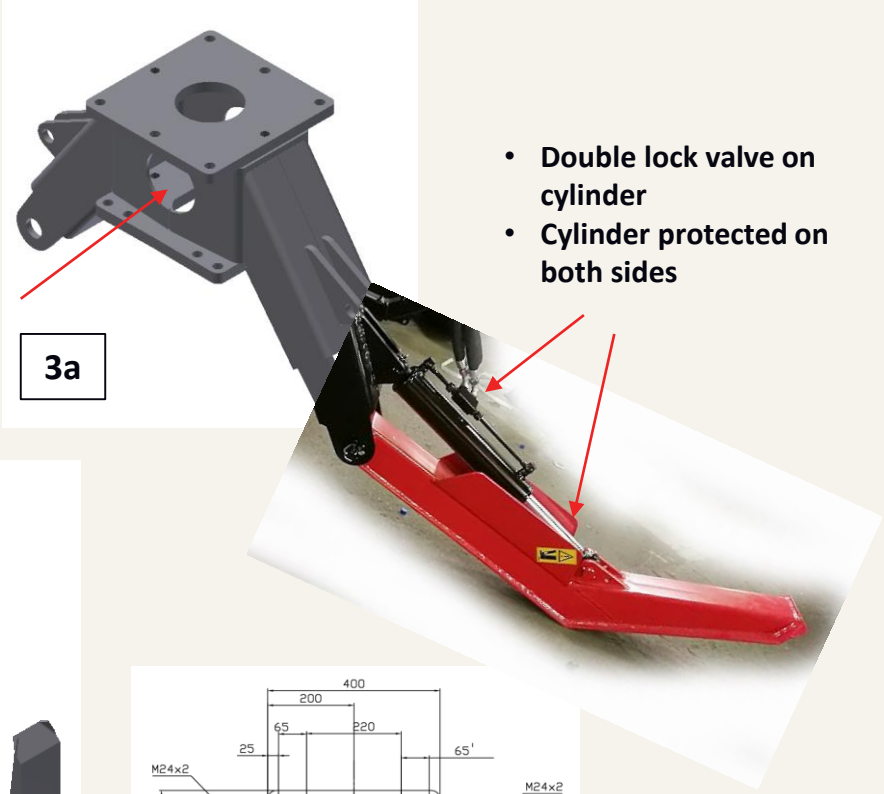

- **Double lock valve on cylinder**
- **Cylinder protected on both sides**

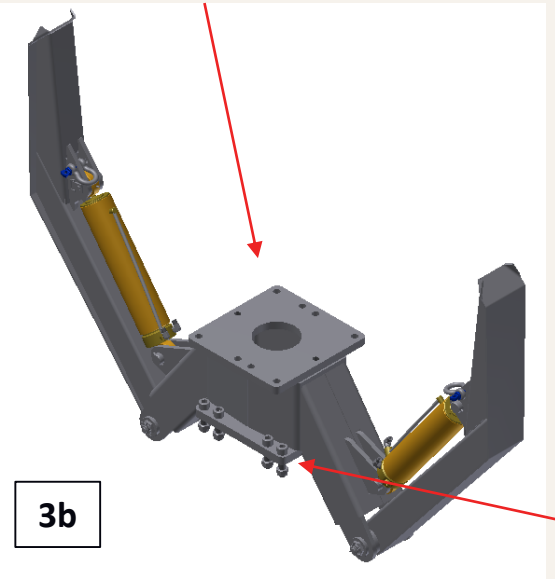

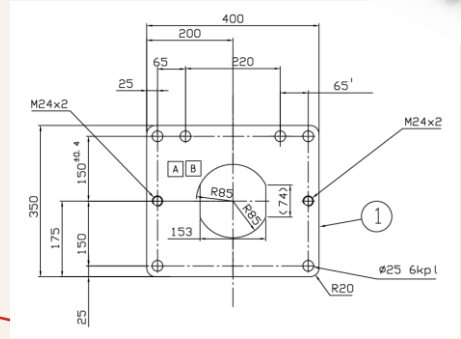

Trailer adapter plate

FARMI FOREST

1 **Better ground clearance than A-leg when trailer is tilting**

2 **Load carrying capacity increases when the legs are lowered**

3 **Two models of support legs:**

(3a) Basic (previous Vario) and

(3b) Heavy Duty for CR8-serie cranes

- Stated to be durable
- Now **Basic** legs always with the hole for HD suction hose or PTO shaft line through the legs' frame

4 **3-point lingkage available**

- Recommended only for CR47

5 **Same slewing device**

- CR67, CR69, CR87, CR89

SLEWING DEVICE

FARMI FOREST

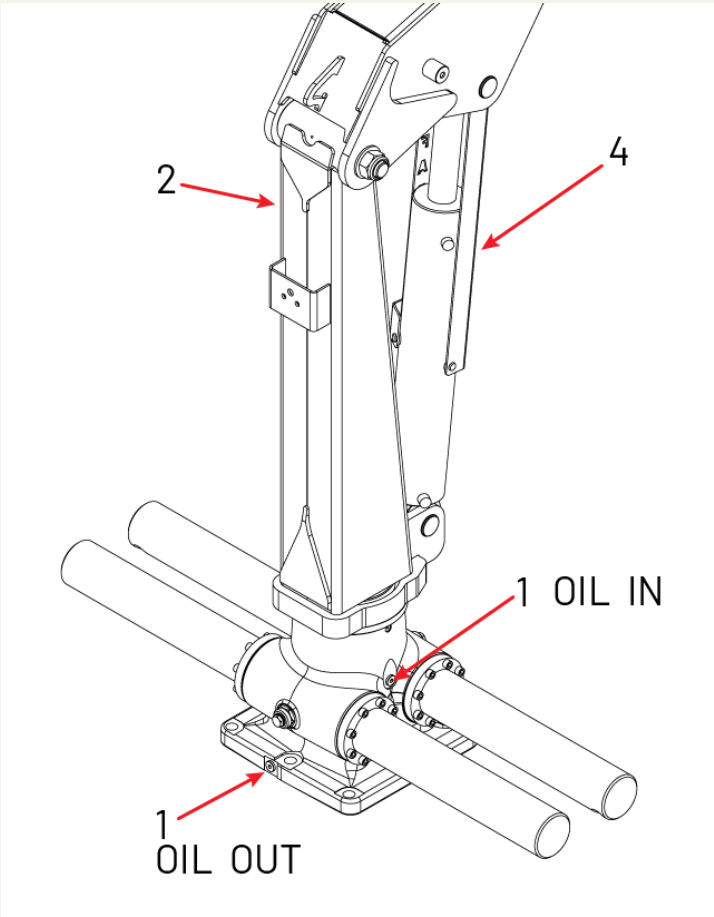

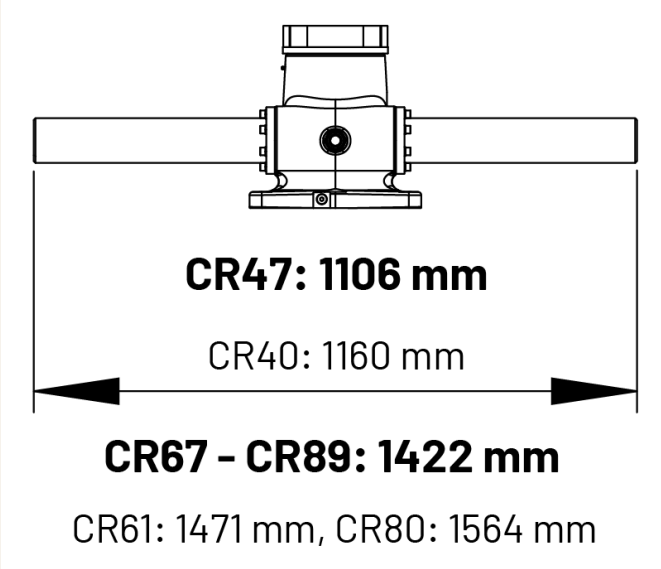

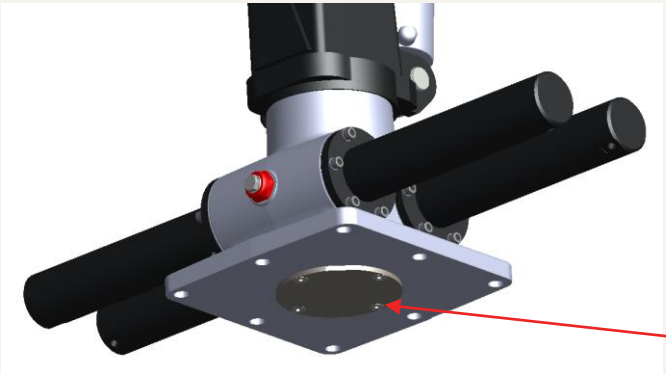

1 **Easy to maintain**
- No need to detach the crane for oil change
- Just open one bolt to run oil out and one to fill in

2 **Better stability**
- Low column CR67-CR89: 1594 mm
  (CR45-CR80: 1634-1674 mm)
  CR47: 1300 mm (CR40-CR46: 1460-1507 mm)

3 **Compact, space saving**
- Shorter cylinders

4 **Lifting cylinder protected with cover**

5 **Same slewing device**
- CR67, CR69, CR87, CR89
  → Much more easier to maintain and less spare parts in stock → more profitable

6 **The same dimension of each base**
- Same mounting plate OR same support legs
- Note: CR47 requires space (10mm*205mm) underneath

7 **Raw materials**
- Slewing gear 42CrMo4+QT (quenced and temperad)
- Gearrack 42CrMo4

LIFTING BOOM

FARMI FOREST

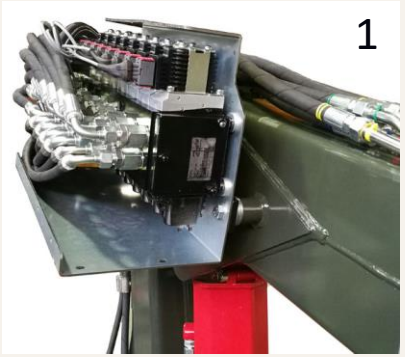

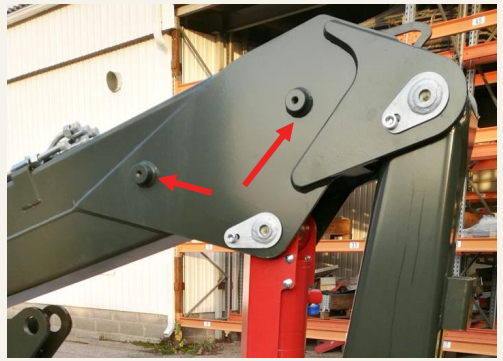

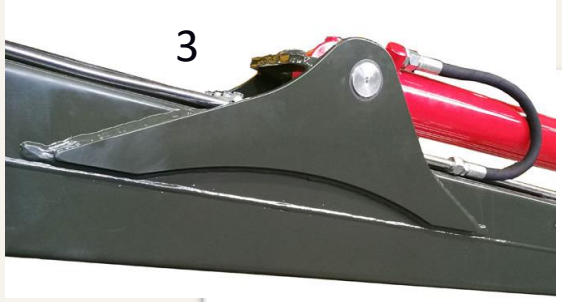

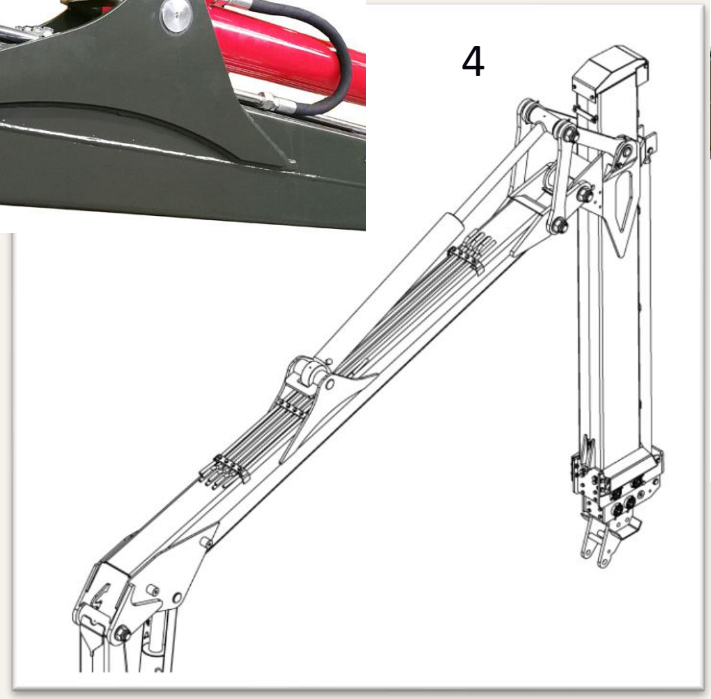

1 **Control valve mounting**

- On the left or right side of the lifting boom
- For Electric Pilot valves

2 **Hydraulic winch mounting on the lifting boom**

- Valve unit can be mounted on the left side on the lifting boom

3 **More durable cylinder brackets**

- Smaller stress points because of the longer brackets
- Easy on the eye

4 **Wide angle joints -> efficient lifting geometry**

5 **Lifting cylinder protected with cover**

FOLDING BOOM

FARMI FOREST

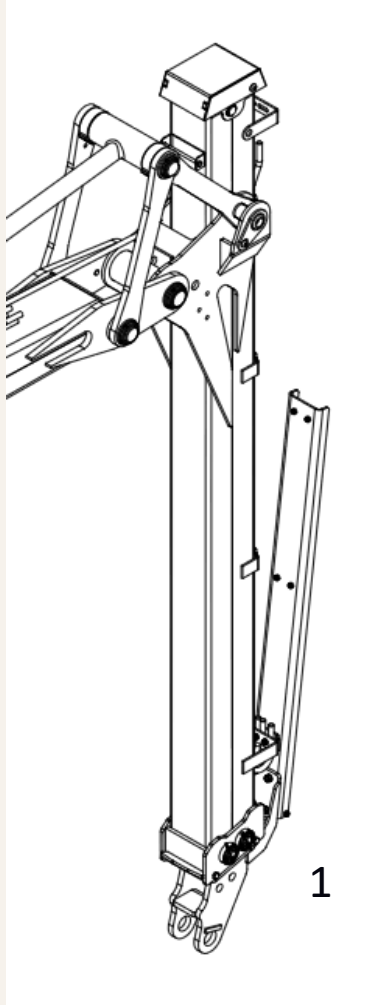

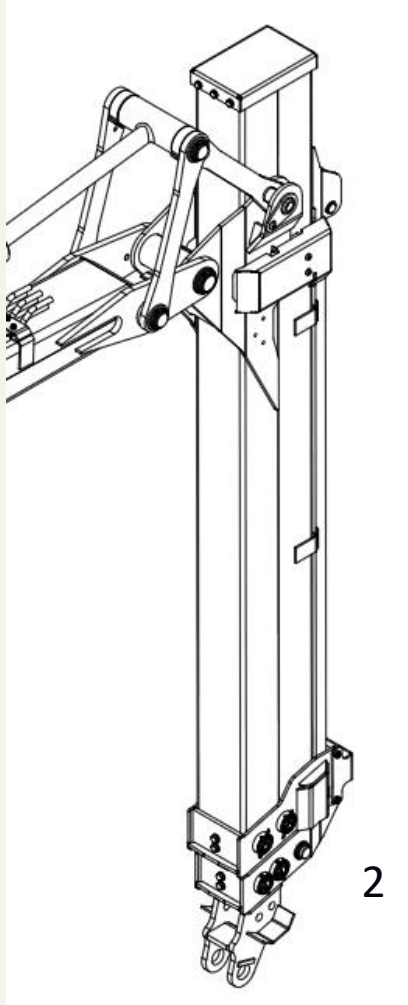

1 **CR47, CR67, CR87**

- Hose channel: Better protection for hydraulic hoses

2 **CR69, CR89**

- Hydraulic hoses inside the boom

3 **Boom end and rotator hoses are protected**

4 **Adjustable sliding pieces on vertical surfaces**

DURABILITY

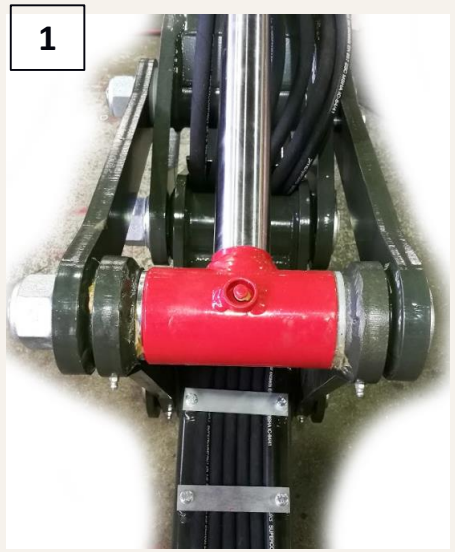

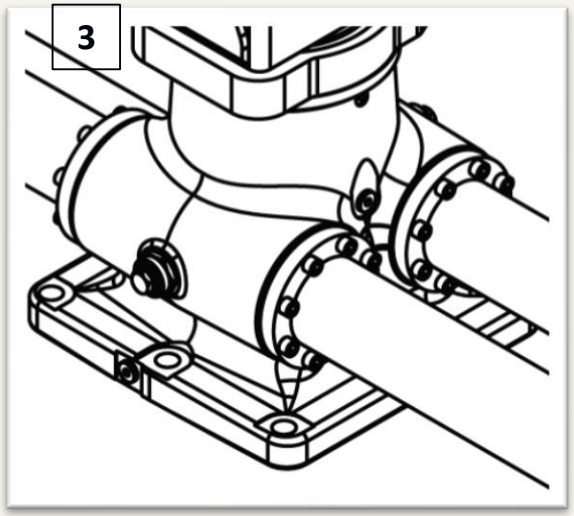

1 **Wide, durable joints**

2 **All pin ends galvanized**

3 **Cast slewing device frame**

4 **Cranes made out of high strength steel**

- 85 % high strength steel
- Thicker plates S355

VALVES

FARMI FOREST

1

LEC

2

HPC

3

Minijoystics

4

Remote Control

1 Mechanic Control Valve with ON/OFF switches for grapple and boom extension (LEC).

2 Hydraulic Pilot Control Valve (HPC)
Smooth, sensitive operation - like excavator control.

3 Electro-hydraulic valve with minijoystics.

4 Remote Control (Electric Pilot Control Valve with remote control)

FARMI FOREST

CR69 Shipping dimensions / 1 pc

	length	width	height	Gross weight, kg	Volume,m^3	Load meter
CR69	4,00	1,45	1,84	1287	10,67	2,42

FARMI FOREST

CR87

CR87 CRANE

CR87 is an efficient and high-performance crane. CR87 comes with one extension. The booms are made 85% of high strength steel. Crane has a robust and powerful die cast gear house and the oil drain cap makes maintenance easy. Standard equipment includes an electrically controlled valve on the side of the crane boom. The crane’s standard equipment also includes a lift cylinder cover. CR87 has the hosing for the double extension inside the extension. Rotator hoses are well protected at the boom. You can choose TG23, BG21 or TG26 grapple for CR87. The flanged model rotator enables providing protection to the grapple hoses. The grapple penetrates stacks efficiently and does not turn the final logs to a grid formation.

Valves: On/Off, Hydraulic Pilot Control, Electric Pilot Control, Remote Control.

FARMI FOREST

CR87

Technical details	
Outreach, m	7,4
Gross lifting torque, kNm, 190 bar	75
Lifting capacity, 4 m / Max reach (+/- 2%)*, 190 bar	870 / 390
Slewing torque, kNm	19
Slewing angle, o	380
Weight, kg**	1060
Cross link	CL8045
Rotator	CR600
Grapple	TG23/TG26
Lifting cylinder	Ø115/70
Folding cylinder	Ø100/56
Extension cylinder	Ø50/35

**excluding link, rotator, grapple and valve

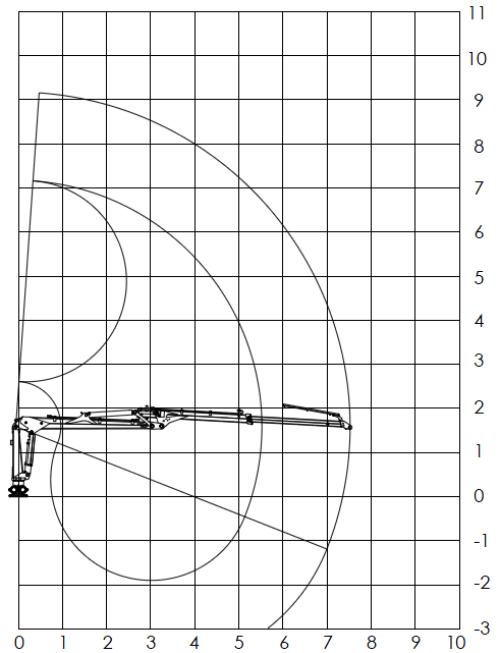

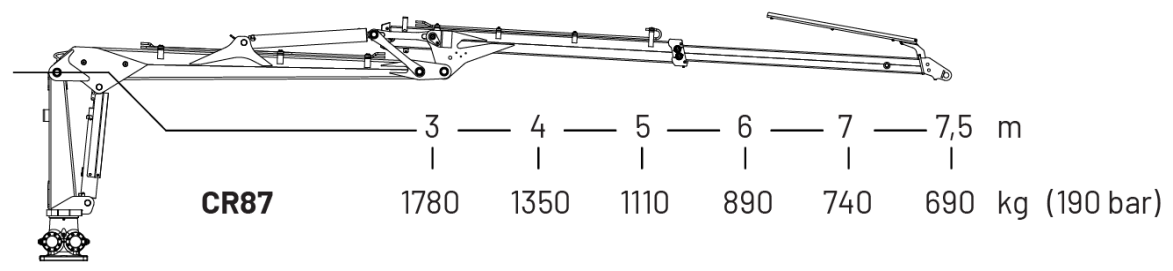

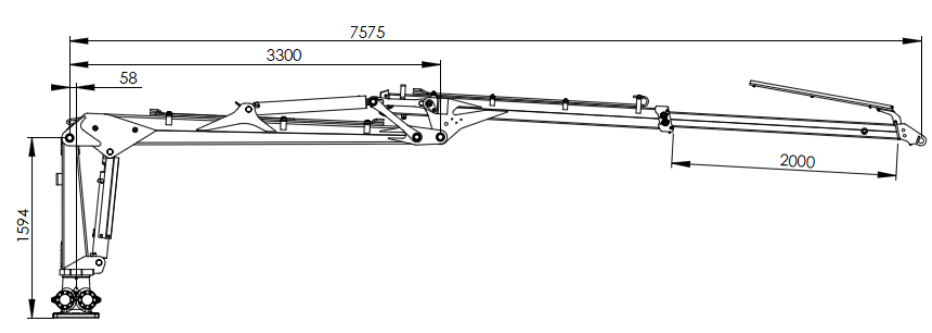

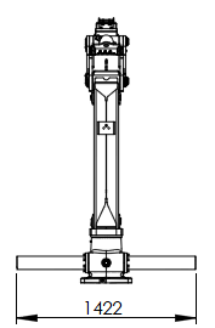

SUPPORT LEGS

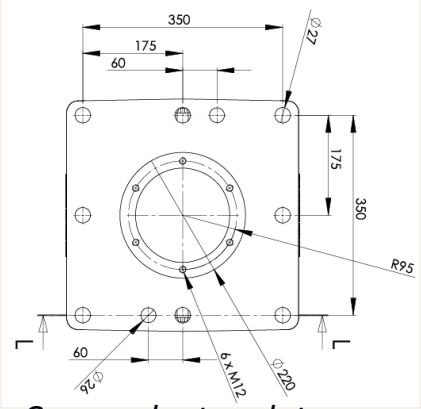

Crane adapter plate

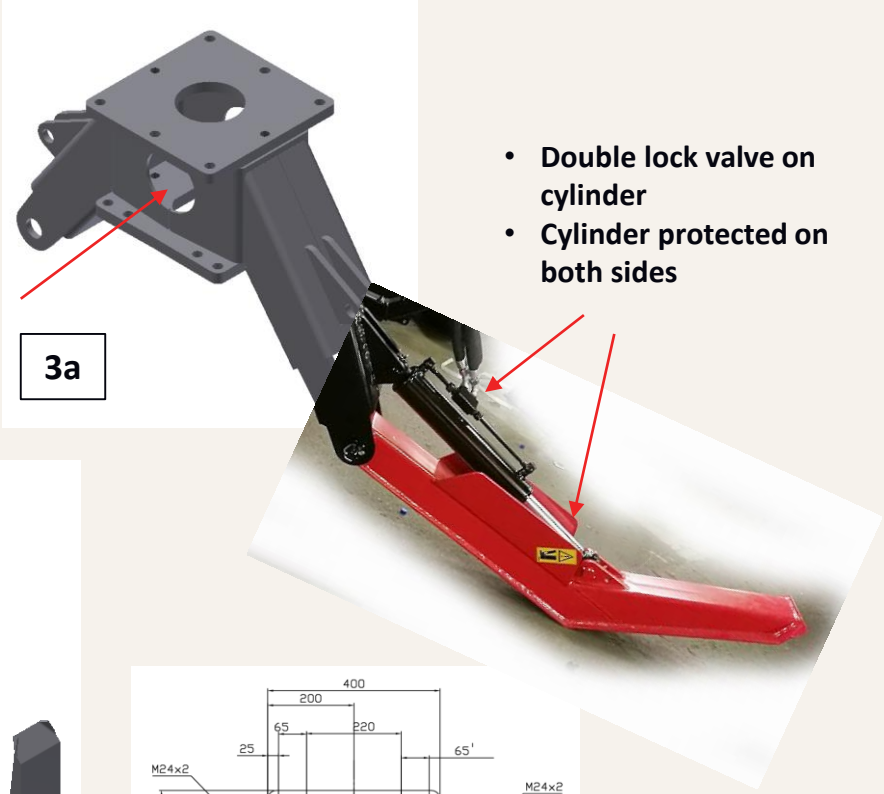

- **Double lock valve on cylinder**
- **Cylinder protected on both sides**

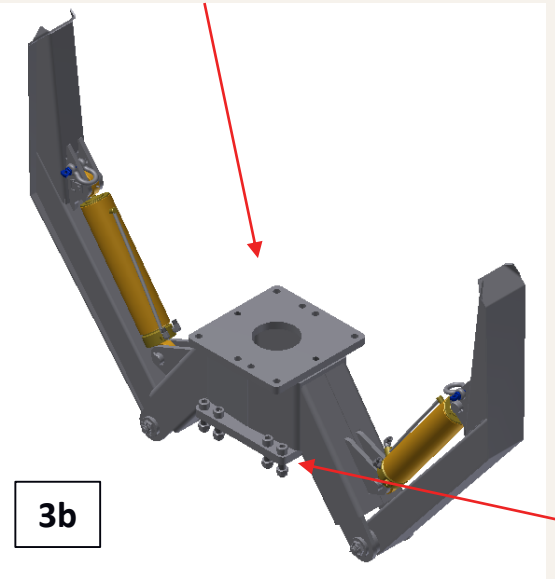

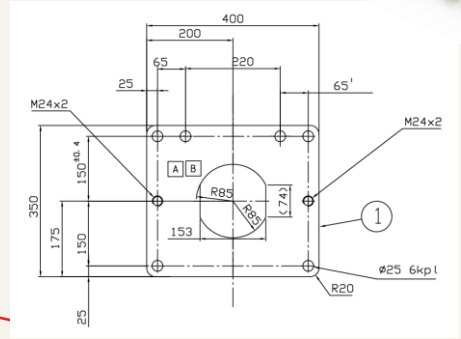

Trailer adapter plate

FARMI FOREST

1 **Better ground clearance than A-leg when trailer is tilting**

2 **Load carrying capacity increases when the legs are lowered**

3 **Two models of support legs:**

(3a) Basic (previous Vario) and

(3b) Heavy Duty for CR8-serie cranes

- Stated to be durable
- Now **Basic** legs always with the hole for HD suction hose or PTO shaft line through the legs' frame

4 **3-point lingkage available**

- Recommended only for CR47

5 **Same slewing device**

- CR67, CR69, CR87, CR89

SLEWING DEVICE

FARMI FOREST

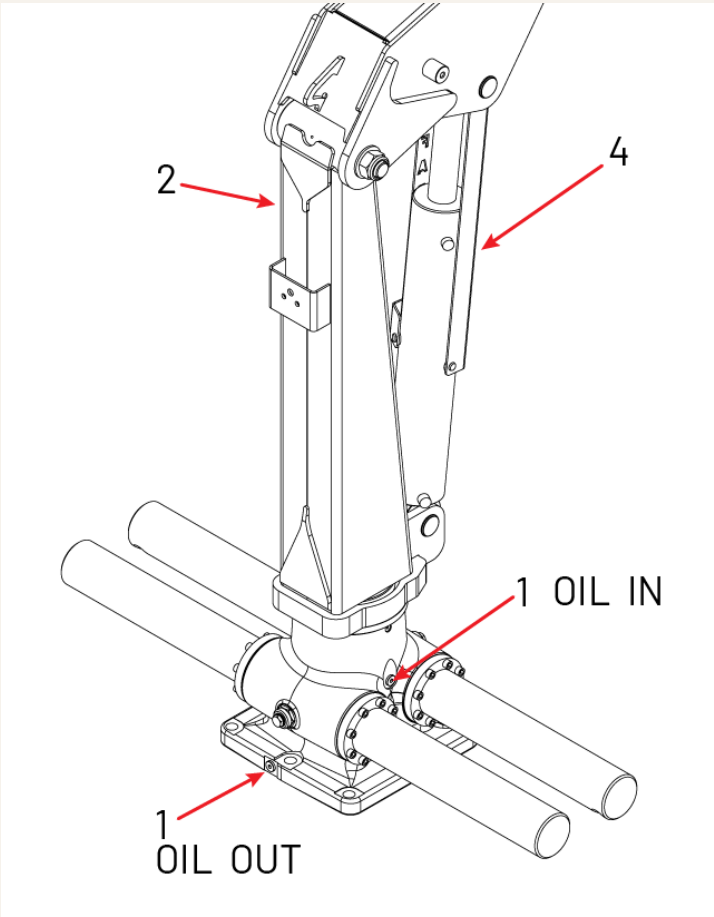

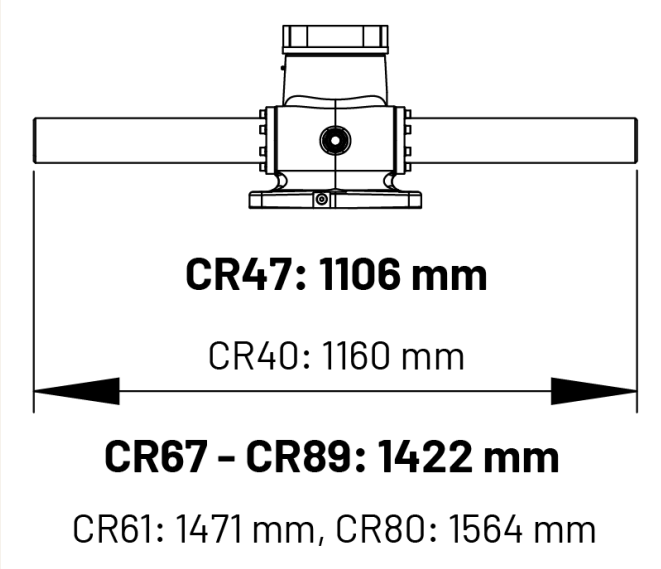

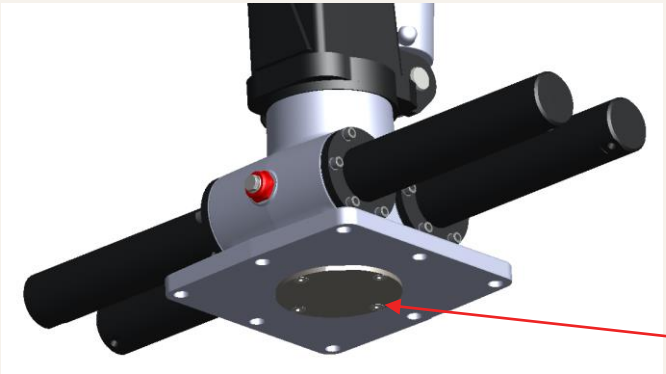

1 **Easy to maintain**
- No need to detach the crane for oil change
- Just open one bolt to run oil out and one to fill in

2 **Better stability**
- Low column CR67-CR89: 1594 mm
  (CR45-CR80: 1634-1674 mm)
  CR47: 1300 mm (CR40-CR46: 1460-1507 mm)

3 **Compact, space saving**
- Shorter cylinders

4 **Lifting cylinder protected with cover**

5 **Same slewing device**
- CR67, CR69, CR87, CR89
  → Much more easier to maintain and less spare parts in stock → more profitable

6 **The same dimension of each base**
- Same mounting plate OR same support legs
- Note: CR47 requires space (10mm*205mm) underneath

7 **Raw materials**
- Slewing gear 42CrMo4+QT (quenced and temperad)
- Gearrack 42CrMo4

LIFTING BOOM

FARMI FOREST

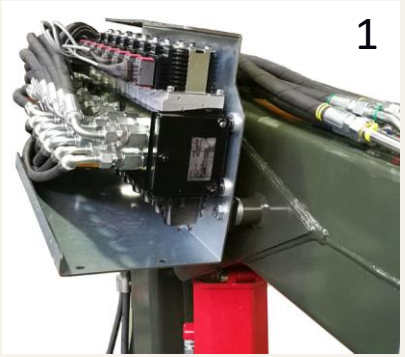

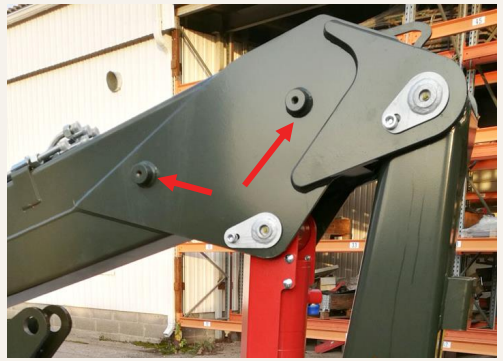

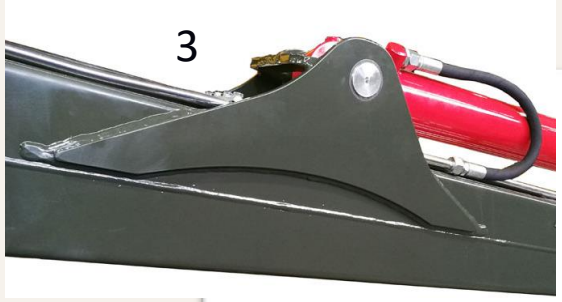

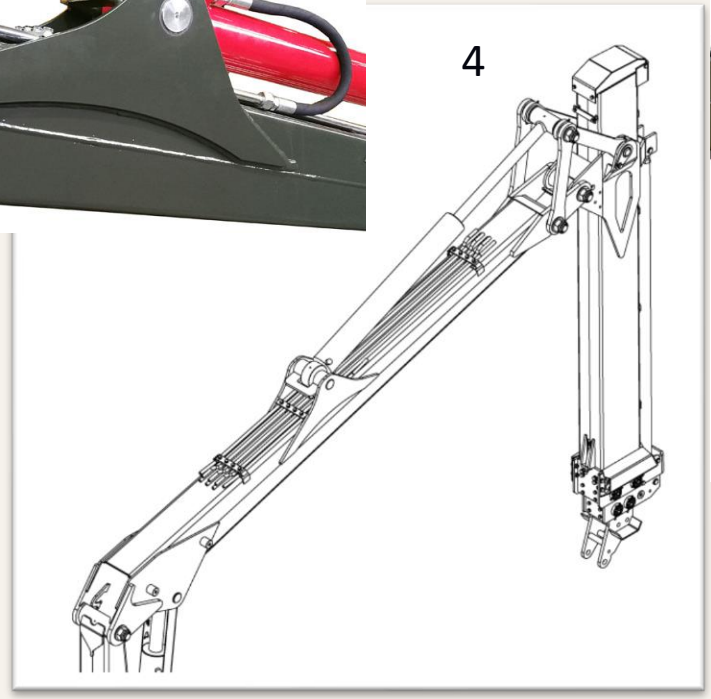

1 **Control valve mounting**

- On the left or right side of the lifting boom
- For Electric Pilot valves

2 **Hydraulic winch mounting on the lifting boom**

- Valve unit can be mounted on the left side on the lifting boom

3 **More durable cylinder brackets**

- Smaller stress points because of the longer brackets
- Easy on the eye

4 **Wide angle joints -> efficient lifting geometry**

5 **Lifting cylinder protected with cover**

FOLDING BOOM

FARMI FOREST

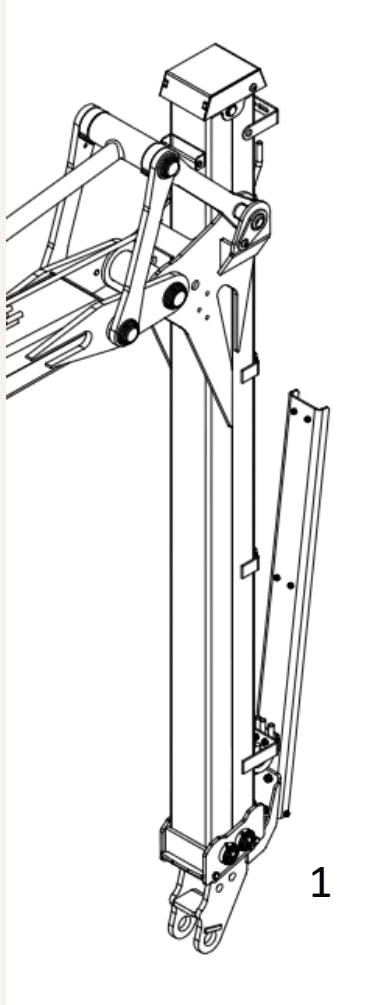

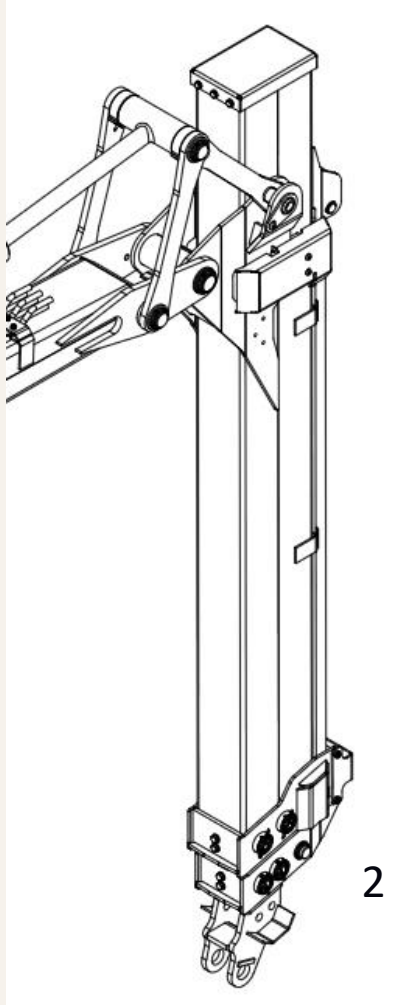

1 **CR47, CR67, CR87**

- Hose channel: Better protection for hydraulic hoses

2 **CR69, CR89**

- Hydraulic hoses inside the boom

3 **Boom end and rotator hoses are protected**

4 **Adjustable sliding pieces on vertical surfaces**

DURABILITY

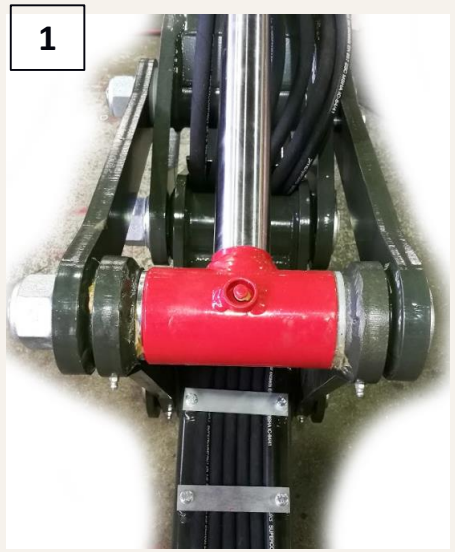

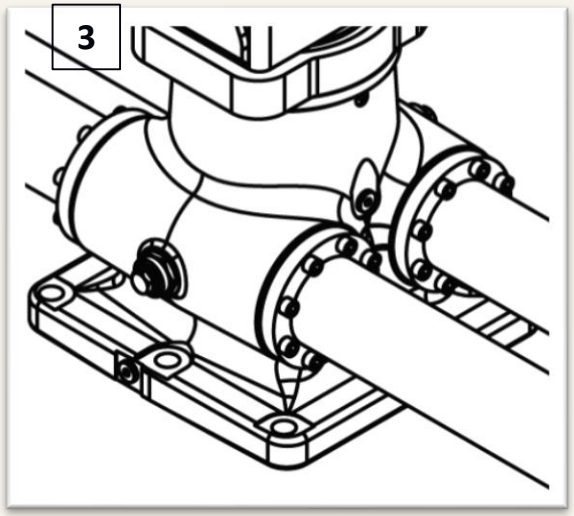

1 **Wide, durable joints**

2 **All pin ends galvanized**

3 **Cast slewing device frame**

4 **Cranes made out of high strength steel**

- 85 % high strength steel
- Thicker plates S355

VALVES

FARMI FOREST

1

LEC

2

HPC

3

Minijoystics

4

Remote Control

1 Mechanic Control Valve with ON/OFF switches for grapple and boom extension (LEC).

2 Hydraulic Pilot Control Valve (HPC)
Smooth, sensitive operation - like excavator control.

3 Electro-hydraulic valve with minijoystics.

4 Remote Control (Electric Pilot Control Valve with remote control)

FARMI FOREST

CR87 Shipping dimensions / 1 pc

	length	width	height	Gross weight, kg	Volume,m^3	Load meter
CR87	4,00	1,45	1,84	1342	10,67	2,42

FARMI FOREST

CR89

CR89 CRANE

CR89 is an efficient and high-performance crane. CR89 comes with two extensions. The booms are made 85% of high strength steel. Crane has a robust and powerful die cast gear house and the oil drain cap makes maintenance easy. Standard equipment includes an electrically controlled valve on the side of the crane boom. The crane's standard equipment also includes a lift cylinder cover. CR89 has the hosing for the double extension inside the extension. Rotator hoses are well protected at the boom. You can choose TG23, BG21 or TG26 grapple for CR89. The flanged model rotator enables providing protection to the grapple hoses. The grapple penetrates stacks efficiently and does not turn the final logs to a grid formation.

Valves: On/Off, Hydraulic Pilot Control, Electric Pilot Control, Remote Control.

CR89

Technical details	
Outreach, m	9
Gross lifting torque, kNm, 190 bar	75
Lifting capacity, 4 m / Max reach (+/- 2%)*, 190 bar	1180 / 460
Slewing torque, kNm	19
Slewing angle, o	380
Weight, kg**	1210
Cross link	CL8045
Rotator	CR600
Grapple	TG23/TG26
Lifting cylinder	Ø115/70
Folding cylinder	Ø100/56
Extension cylinder	Ø60/40

*excluding link, rotator, grapple
**excluding link, rotator, grapple and valve

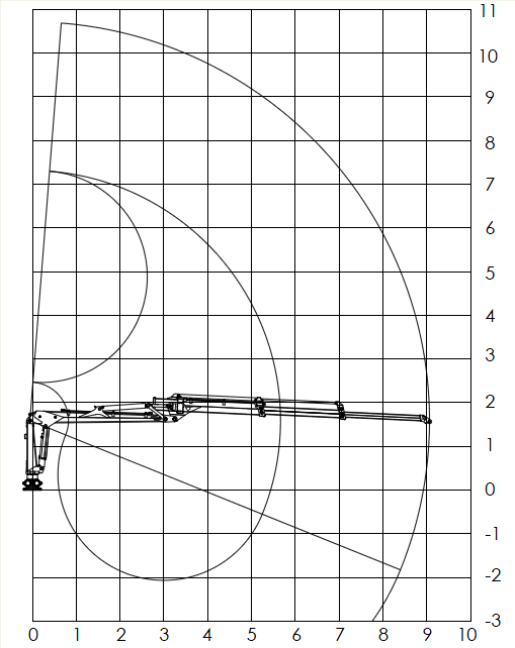

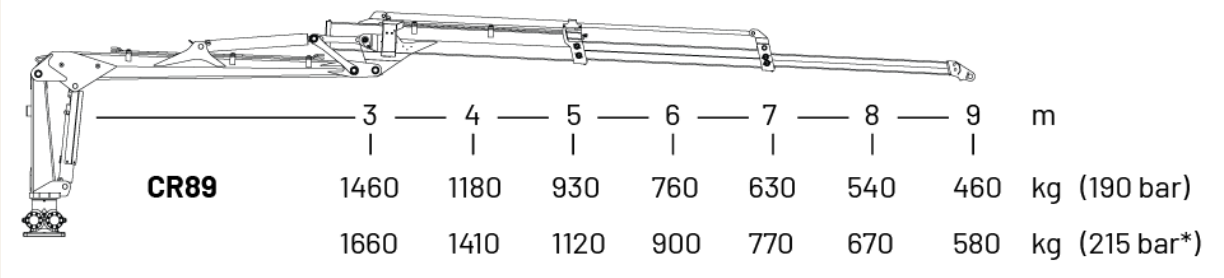

*) Farmi doesn't allow dealers to adjust cranes for high-pressure (over 190 bar) use.
If bigger lifting power needed, please, contact with Farmi sales department.

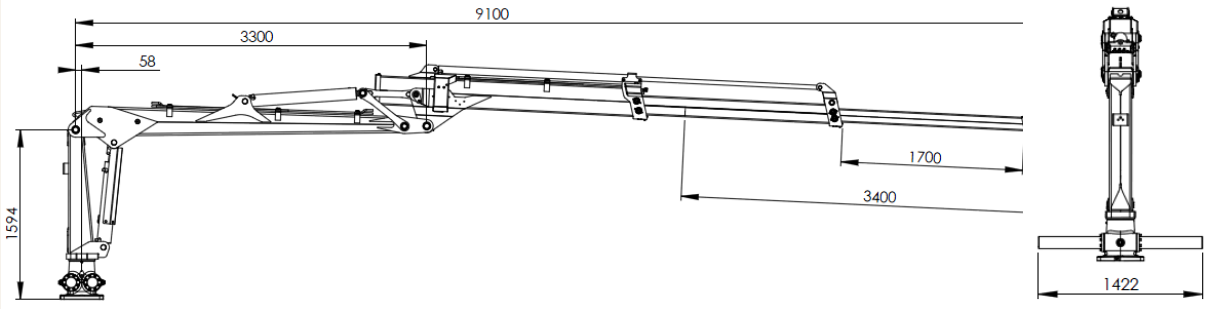

SUPPORT LEGS

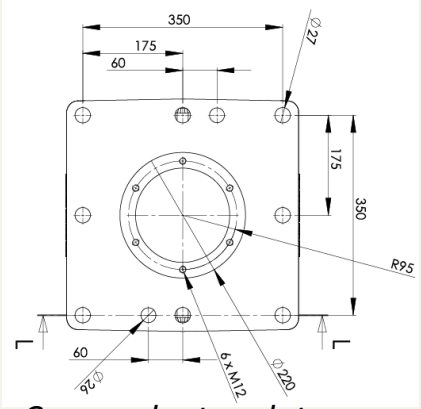

Crane adapter plate

3a

- Double lock valve on cylinder
- Cylinder protected on both sides

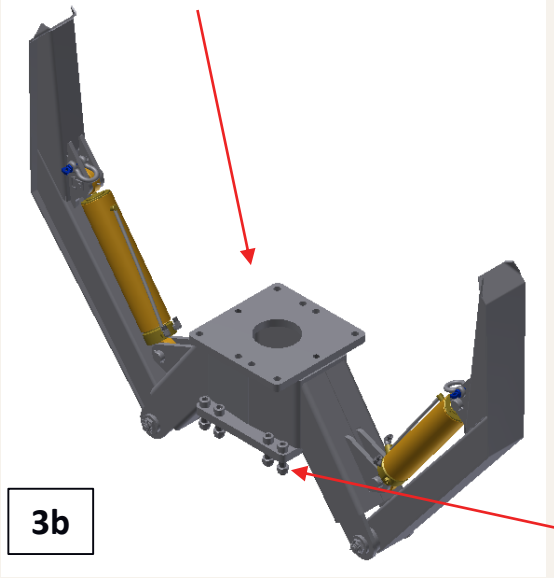

3b

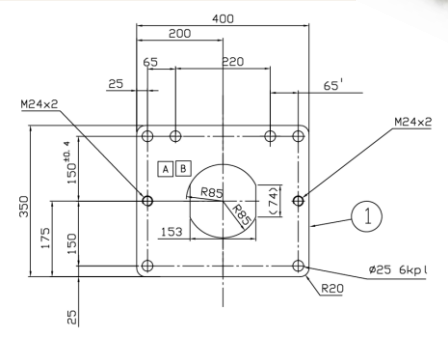

Trailer adapter plate

1 **Better ground clearance than A-leg when trailer is tilting**

2 **Load carrying capacity increases when the legs are lowered**

3 **Two models of support legs:**

(3a) Basic (previous Vario) and

(3b) Heavy Duty for CR8-serie cranes

- Stated to be durable
- Now **Basic** legs always with the hole for HD suction hose or PTO shaft line through the legs' frame

4 **3-point linkage available**

- Recommended only for CR47

5 **Same slewing device**

- CR67, CR69, CR87, CR89

SLEWING DEVICE

FARMI FOREST

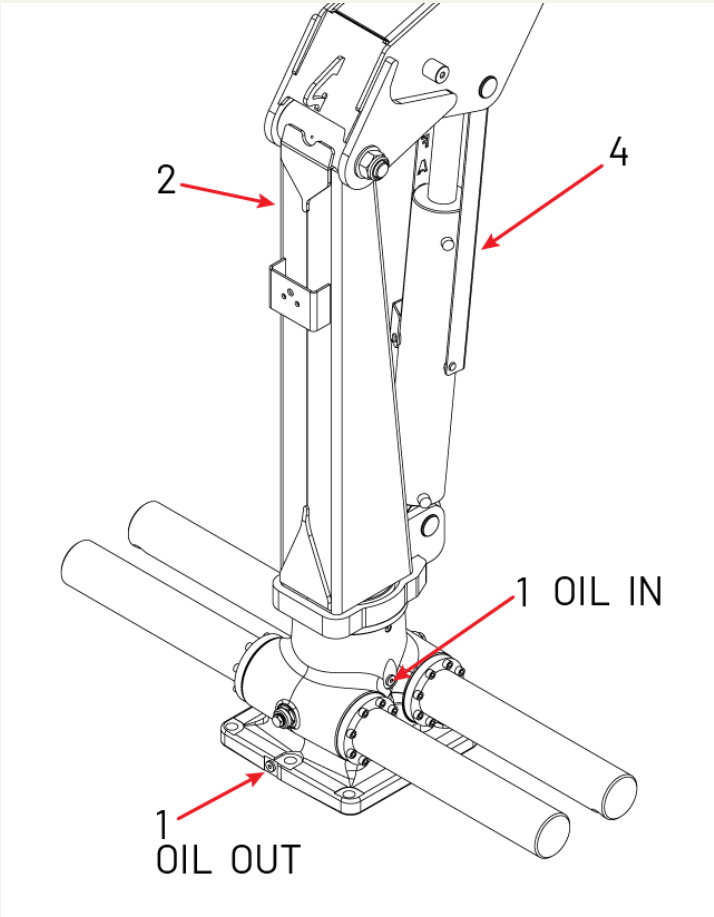

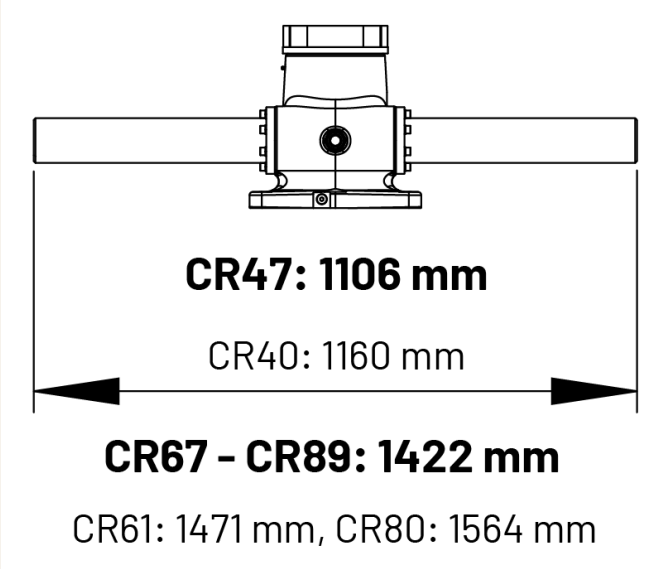

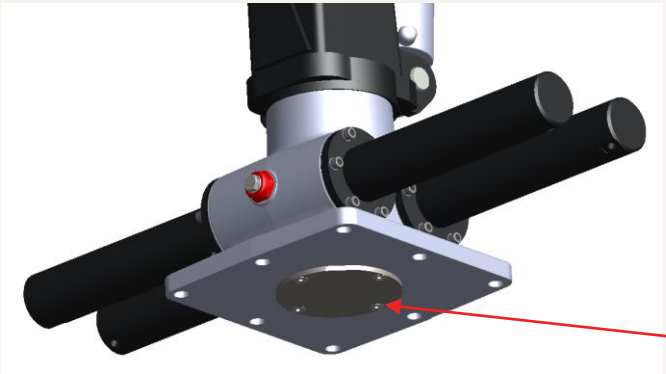

1 **Easy to maintain**
- No need to detach the crane for oil change
- Just open one bolt to run oil out and one to fill in

2 **Better stability**
- Low column CR67-CR89: 1594 mm
  (CR45-CR80: 1634-1674 mm)
  CR47: 1300 mm (CR40-CR46: 1460-1507 mm)

3 **Compact, space saving**
- Shorter cylinders

4 **Lifting cylinder protected with cover**

5 **Same slewing device**
- CR67, CR69, CR87, CR89
  → Much more easier to maintain and less spare parts in stock → more profitable

6 **The same dimension of each base**
- Same mounting plate OR same support legs
- Note: CR47 requires space (10mm*205mm) underneath

7 **Raw materials**
- Slewing gear 42CrMo4+QT (quenced and temperad)
- Gearrack 42CrMo4

LIFTING BOOM

FARMI FOREST

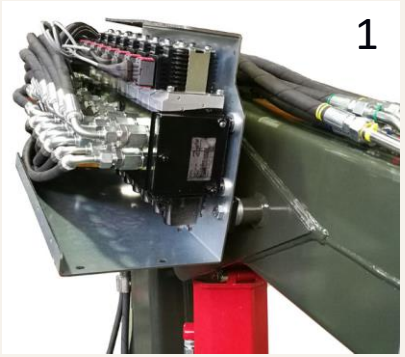

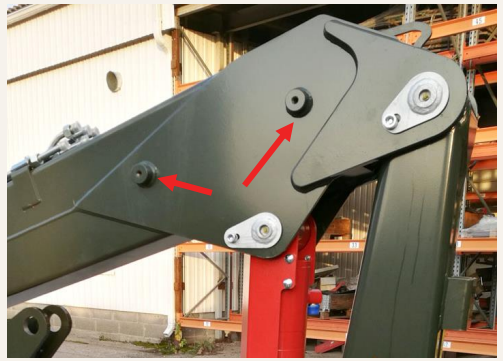

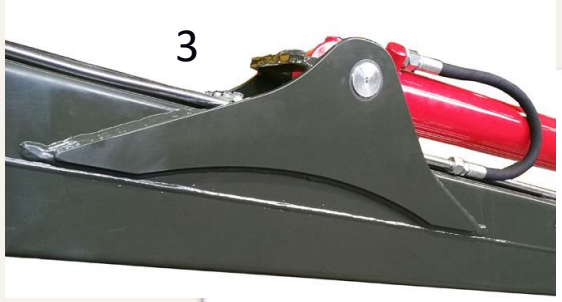

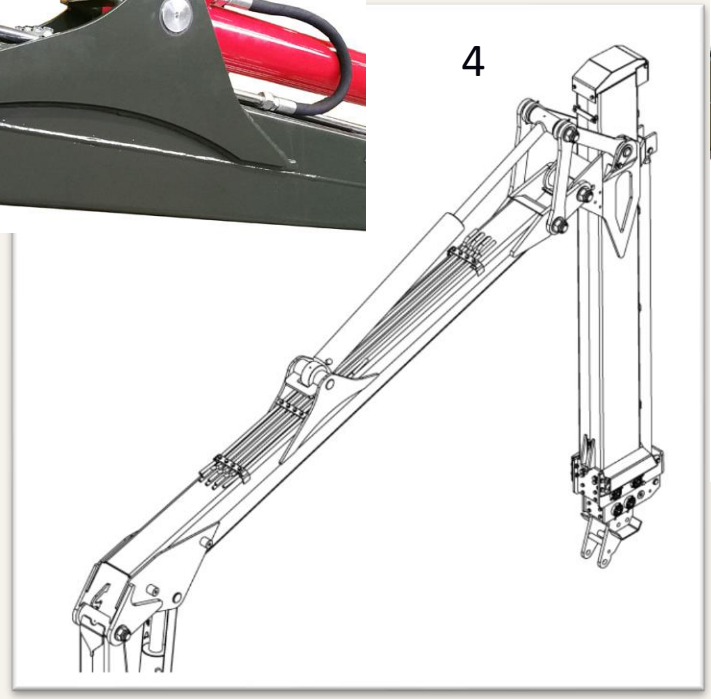

1 **Control valve mounting**

- On the left or right side of the lifting boom
- For Electric Pilot valves

2 **Hydraulic winch mounting on the lifting boom**

- Valve unit can be mounted on the left side on the lifting boom

3 **More durable cylinder brackets**

- Smaller stress points because of the longer brackets
- Easy on the eye

4 **Wide angle joints -> efficient lifting geometry**

5 **Lifting cylinder protected with cover**

VALVES

FARMI FOREST

1

LEC

2

HPC

3

Minijoystics

4

Remote Control

1 Mechanic Control Valve with ON/OFF switches for grapple and boom extension (LEC).

2 Hydraulic Pilot Control Valve (HPC)
Smooth, sensitive operation - like excavator control.

3 Electro-hydraulic valve with minijoystics.

4 Remote Control (Electric Pilot Control Valve with remote control)

FARMI FOREST

CR89 Shipping dimensions / 1 pc

	length	width	height	Gross weight, kg	Volume,m^3	Load meter
CR89	4,00	1,45	1,84	1492	10,67	2,42

FARMI FOREST

FORESTRY GRAPPLES

TG16, TG18, BG21, TG23, TG26

FARMI FOREST

CROSS LINKS, ROTATORS AND GRAPPLES

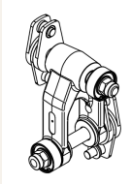

Cross link with double brake CDBL7325

CR47, CR67, CR69

Cross link without brake CL8045

CR87, CR89

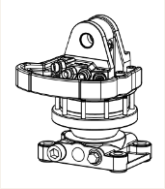

Rotator CR300

with flange

CR47

Rotator CR404

with flange

CR67, CR69

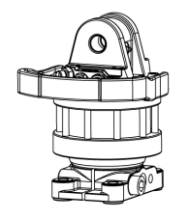

Rotator CR600

with flange

CR87, CR89

Grapple TG18

Energy grapples B15, C21

CR47

Grapple BG21

Energy grapples B15, C21

CR67,CR69,CR87,CR89

Grapple TG23

Energy grapples B15, C21

CR67, CR69

Grapple TG26

Energy grapples B15, C21

CR87, CR89

TG16

Well designed, fast and accurate timber grapple. Easy to handle firewood and logs.

TG18

Well designed, fast and accurate timber grapple. Easy to handle firewood and llogs. The TG18 is one size larger than the TG16.

BG 21

Handling of energy wood, branches and whole trees.

TG23

Robust, strong and large opening. Suits well to handle energy wood piles and hay bales.

TG26

Bigger option for this CR87 or 89. Robust, strong and large opening. Good with energy wood piles, logs and hay bales.

FARMI FOREST

Grapple dimensions

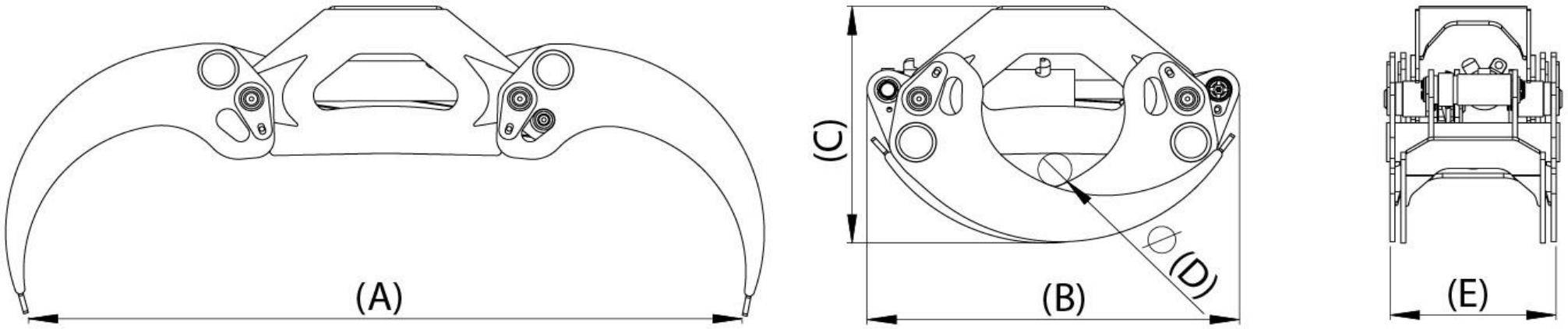

MODEL	Mass(kg)	Area(m²)	A(mm)	B(mm)	C(mm)	D(mm)	E(mm)
TG16	66	0.1 6	1040	670	410	55	305
TG18	88	0.18	1230	690	480	80	315
TG23	114	0.23	1465	760	500	69	340
Twig grapple 021	127	0.21	1475	760	500	60	370
TG26	148	0.265	1400	800	580	80	380

FARMI FOREST